Smoke control damper

EK-JS

according to EN 12101-8, tested to EN 1366-10
Declaration of performance DoP / EK-JS / 001

TROX® TECHNIK
The art of handling air

Read the instructions prior to performing any task!

TROX GmbH
Heinrich-Trox-Platz
47504 Neukirchen-Vluyn, Germany
Germany
Phone: +49 (0) 2845 2020
Fax: +49 (0) 2845 202-265
E-mail: trox@trox.de
Internet: http://www.troxtechnik.com

Translation of the original
A00000090732, 2, GB/en
01/2022

Valid from 01/2022

General information

About this manual

This operating and installation manual enables operating or service personnel to correctly install the TROX product described below and to use it safely and efficiently.

This operating and installation manual is intended for use by fitting and installation companies, in-house technicians, technical staff, instructed persons, and qualified electricians or air conditioning technicians.

It is essential that these individuals read and fully understand this manual before starting any work. The basic prerequisite for safe working is to comply with the safety notes and all instructions in this manual.

The local regulations for health and safety at work and general safety regulations also apply.

This manual must be given to the system owner when handing over the system. The system owner must include the manual with the system documentation. The manual must be kept in a place that is accessible at all times.

Illustrations in this manual are mainly for information and may differ from the actual design.

Copyright

TROX Technical Service

To ensure that your request is processed as quickly as possible, please keep the following information ready:

- Product name
- TROX order number
- Delivery date
- Brief description of the fault

Online	www.troxtechnik.com
Phone	+49 2845 202-400

Limitation of liability

The information in this manual has been compiled with reference to the applicable standards and guidelines, the state of the art, and our expertise and experience of many years.

The manufacturer does not accept any liability for damages resulting from:

- Non-compliance with this manual
- Incorrect use
- Operation or handling by untrained individuals
- Unauthorised modifications
- Technical changes
- Use of non-approved replacement parts

The actual scope of delivery may differ from the information in this manual for bespoke constructions, additional order options or as a result of recent technical changes.

The obligations agreed in the order, the general terms and conditions, the manufacturer's terms of delivery, and the legal regulations in effect at the time the contract is signed shall apply.

We reserve the right to make technical changes.

Warranty claims

The provisions of the respective general delivery terms apply to warranty claims. For purchase orders placed with TROX GmbH, these are the regulations in section "VI. Warranty claims" of the Delivery Terms of TROX GmbH, see www.trox.de/en/ .

Safety notes

Symbols are used in this manual to alert readers to areas of potential hazard. Signal words express the degree of the hazard.

Comply with all safety instructions and proceed carefully to avoid accidents, injuries and damage to property.

DANGER!

Imminently hazardous situation which, if not avoided, will result in death or serious injury.

WARNING!

Potentially hazardous situation which, if not avoided, may result in death or serious injury.

CAUTION!

Potentially hazardous situation which, if not avoided, may result in minor or moderate injury.

NOTICE!

Potentially hazardous situation which, if not avoided, may result in property damage.

ENVIRONMENT!

Environmental pollution hazard.

Tips and recommendations

Useful tips and recommendations as well as information for efficient and fault-free operation.

Safety notes as part of instructions

Safety notes may refer to individual instructions. In this case, safety notes will be included in the instructions and hence facilitate following the instructions. The above listed signal words will be used.

Example:

1. Loosen the screw.
2. **CAUTION!**

   Danger of finger entrapment when closing the lid.

   Be careful when closing the lid.
3. Tighten the screw.

Specific safety notes

The following symbols are used in safety notes to alert you to specific hazards:

Warning signs	Type of danger
	Warning – danger zone.

Table of contents

1 Safety

1.1 General safety notes

Sharp edges, sharp corners and thin sheet metal parts

CAUTION!

Danger of injury from sharp edges, sharp corners and thin sheet metal parts!

Sharp edges, sharp corners and thin sheet metal parts may cause cuts or grazes.

– Be careful when carrying out any work.
– Wear protective gloves, safety shoes and a hard hat.

Electrical voltage

DANGER!

Danger of electric shock! Do not touch any live components! Electrical equipment carries a dangerous electrical voltage.

– Only skilled qualified electricians are allowed to work on the electrical system.
– Switch off the power supply before working on any electrical equipment.

1.2 Correct use

- Type EK-JS smoke control dampers are used in smoke and heat exhaust systems to remove smoke and heat. EK-JS smoke control dampers may be used with the following systems:
  – in pressure differential systems
  – mechanical (i.e. powered) smoke exhaust systems
  – natural smoke and heat exhaust systems
  – heat exhaust systems
- For use in single sections for increased operating temperatures up to 600 °C.
- Permitted for automatic release.
- Suitable for use in combined systems (combination damper) for ventilation.
- Suitable for restricting extract air flow rates.
- Operation of the smoke control dampers is only permitted in compliance with the Declaration of Performance (DoP) and these installation and operating instructions.
- Modifying the smoke control damper or using replacement parts that have not been approved by TROX is not permitted.

Incorrect use

WARNING!

Danger due to incorrect use!

Incorrect use of the smoke control damper can lead to dangerous situations.

Never use the smoke control damper:

– in areas with potentially explosive atmospheres
– outdoors without sufficient protection against the effects of weather and outside of temperature limits
– in atmospheres where chemical reactions, whether planned or unplanned, may cause damage to the smoke control damper or lead to corrosion

1.3 Qualified staff

WARNING!

Danger of injury due to insufficiently qualified individuals!

Incorrect use may cause considerable injury or damage to property.

– Only specialist personnel must carry out work.

The following degrees of qualification are required for the work described in the operating manual:

Skilled qualified electrician
Skilled qualified electricians are individuals who have sufficient professional or technical training, knowledge and actual experience to enable them to work on electrical systems, understand any potential hazards related to the work under consideration, and recognise and avoid any risks involved.

Specialist personnel
Specialist personnel are individuals who have sufficient professional or technical training, knowledge and actual experience to enable them to carry out their assigned duties, understand any potential hazards related to the work under consideration, and recognise and avoid any risks involved.

2 Technical data

2.1 General data

Nominal sizes B × H	100 × 100 – 1250 × 2560 mm
Casing length	200 mm
Flow rate range at maximum face velocity 10 m/s	from 360 m³/h to 115,200 m³/h from 100 l/s to 32,000 l/s
Differential pressure range	Pressure level 3, –1500 to 500 Pa
Operating temperature	-30 °C...50 °C the temperature should not fall below the dew point
Upstream velocity with uniform upstream and downstream flow	▪ ≤ 12 m/s, dimensional range ↳ *table on page 9* ▪ ≤ 20 m/s, dimensional range ↳ *table on page 10* **Note:** Technical clarification with TROX required for some sizes.
Closed damper leakage	EN 1751, Class 2 Nominal size B × H ≥ 840 x 480: Class 3
Casing leakage	EN 1751, Class B Nominal size B × H ≥ 840 x 480: Class C
EC conformity	▪ EU Construction Products Regulation no. 305/2011 ▪ EN 12101-8 – Smoke and heat control systems – Smoke control dampers ▪ EN 1366-10 – Fire resistance tests for service installations – Smoke control dampers ▪ EN 13501-4 – Fire classification of construction products and building elements – Fire resistance tests on components of smoke control ▪ EN 1751 – Ventilation for buildings – Air terminal devices
Declaration of performance	DoP / EK-JS / 001

Rating plate

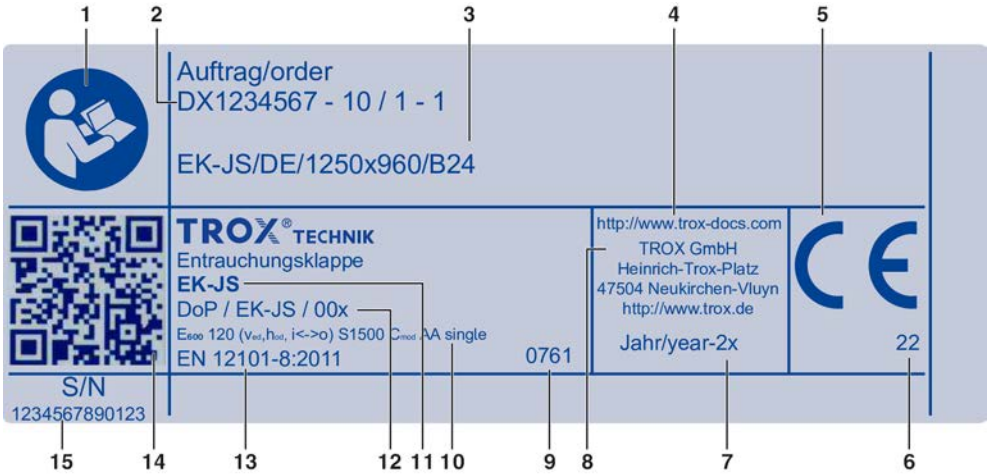

Fig. 1: Smoke control damper rating plate (example)

1 Note regarding the observance of the operating manual
2 Order number
3 Order code
4 Website from which the verification documents can be downloaded
5 CE mark
6 The last two digits of the year in which the CE marking was affixed
7 Year of manufacture
8 Manufacturer's address
9 Notified body
10 Regulated characteristics; the fire resistance class depends on the application and may vary ↳ *5.1 'Installation situations' on page 16*
11 Type
12 No. of the declaration of performance
13 Number of the European standard and year of its publication
14 QR code to call the documentation
15 Product identification number

Actuator depending on the size of the smoke control damper at 12 m/s

H	B																							
	100	150	200	250	300	360	400	450	520	550	600	680	700	750	840	850	900	950	1000	1050	1100	1150	1200	1250
100	×	×	×	×	×	×	×	×	×	×	×	×	×	×	×	×	×	×	×	×	×	×	×	×
125	×	×	×	×	×	×	×	×	×	×	×	×	×	×	×	×	×	×	×	×	×	×	×	×
150	×	×	×	×	×	×	×	×	×	×	×	×	×	×	×	×	×	×	×	×	×	×	×	×
165	×	×	×	×	×	×	×	×	×	×	×	×	×	×	×	×	×	×	×	×	×	×	×	×
320			×	×	×	×	×	×	×	×	×	×	×	×	×	×	×	×	×	×	×	×	×	×
480			×	×	×	×	×	×	×	×	×	×	×	×	×	×	×	×	×	×	×	×	×	×
640			×	×	×	×	×	×	×	×	×	×	×	×	×	×	×	×	×	×	×	×	×	×
800			×	×	×	×	×	×	×	×	×	×	×	×	×	×	×	×	×	×	×	×	×	×
960			×	×	×	×	×	×	×	×	×	×	×	×	×	×	×	×	×	●	●	●	●	●
1120			×	×	×	×	×	×	×	×	×	×	×	×	●	●	●	●	●	●	●	●	●	●
1280			×	×	×	×	×	×	×	×	×	●	●	●	●	●	●	●	●	●	●	●	●	●
1440			×	×	×	×	×	×	●	●	●	●	●	●	●	●	●	●	●	●	●	●	●	●
1600			×	×	×	×	×	●	●	●	●	●	●	●	●	●	●	●	●	●	●	□	□	□
1760			×	×	×	●	●	●	●	●	●	●	●	●	●	●	●	●	□	□	□	□	□	□
1920			×	●	●	●	●	●	●	●	●	●	●	●	□	□	□	□	□	□	□	□	□	□
2080			●	●	●	●	●	●	●	●	●	●	●	□	□	□	□	□	□	□	□	□	□	□
2240			●	●	●	●	●	●	●	●	●	□	□	□	□	□	□	□	□	□	□	□	□	□
2400			●	●	●	●	●	●	●	□	□	□	□	□	□	□	□	□	□	□	□	□	□	□
2560			●	●	●	●	●	●	□	□	□	□	□	□	□	□	□	□	□	□	□	□	★	★

× = 15 Nm BEN, ● = 25 Nm BEE, □ = 40 Nm BE, ★ = technical clarification with TROX required

Actuator depending on the size of the smoke control damper at 20 m/s

H	B																							
	100	150	200	250	300	360	400	450	520	550	600	680	700	750	840	850	900	950	1000	1050	1100	1150	1200	1250
100	×	×	×	×	×	×	×	×	×	×	×	×	×	×	×	×	×	×	×	×	×	×	×	×
125	×	×	×	×	×	×	×	×	×	×	×	×	×	×	×	×	×	×	×	×	×	×	×	×
150	×	×	×	×	×	×	×	×	×	×	×	×	×	×	×	×	×	×	×	×	×	×	×	×
165	×	×	×	×	×	×	×	×	×	×	×	×	×	×	×	×	×	×	×	×	×	×	×	×
320			×	×	×	×	×	×	×	×	×	×	×	×	×	×	×	×	×	×	×	×	×	×
480			×	×	×	×	×	×	×	×	×	×	×	×	×	×	×	×	×	×	×	×	×	×
640			×	×	×	×	×	×	×	×	×	×	×	×	×	×	×	×	×	×	●	●	●	●
800			×	×	×	×	×	×	×	×	×	×	×	×	●	●	●	●	●	●	●	●	●	●
960			×	×	×	×	×	×	×	×	×	●	●	●	●	●	●	●	●	●	●	●	●	●
1120			×	×	×	×	×	×	●	●	●	●	●	●	●	●	●	●	●	●	●	□	□	□
1280			×	×	×	×	×	●	●	●	●	●	●	●	●	●	●	□	□	□	□	□	□	□
1440			×	×	×	●	●	●	●	●	●	●	●	●	□	□	□	□	□	□	□	□	□	□
1600			×	×	●	●	●	●	●	●	●	●	□	□	□	□	□	□	□	□	□	□	□	□
1760			●	●	●	●	●	●	●	●	□	□	□	□	□	□	□	□	□	□	□	□	□	□
1920			●	●	●	●	●	●	□	□	□	□	□	□	□	□	□	□	□	□	✶	✶	✶	✶
2080			●	●	●	●	●	□	□	□	□	□	□	□	□	□	□	□	✶	✶	✶	✶	✶	✶
2240			●	●	●	●	□	□	□	□	□	□	□	□	□	□	✶	✶	✶	✶	✶	✶	✶	✶
2400			●	●	●	□	□	□	□	□	□	□	□	□	✶	✶	✶	✶	✶	✶	✶	✶	✶	✶
2560			●	●	□	□	□	□	□	□	□	□	□	✶	✶	✶	✶	✶	✶	✶	✶	✶	✶	✶

× = 15 Nm BEN, ● = 25 Nm BEE, □ = 40 Nm BE, ✶ = technical clarification with TROX required

2.2 Dimensions and weight

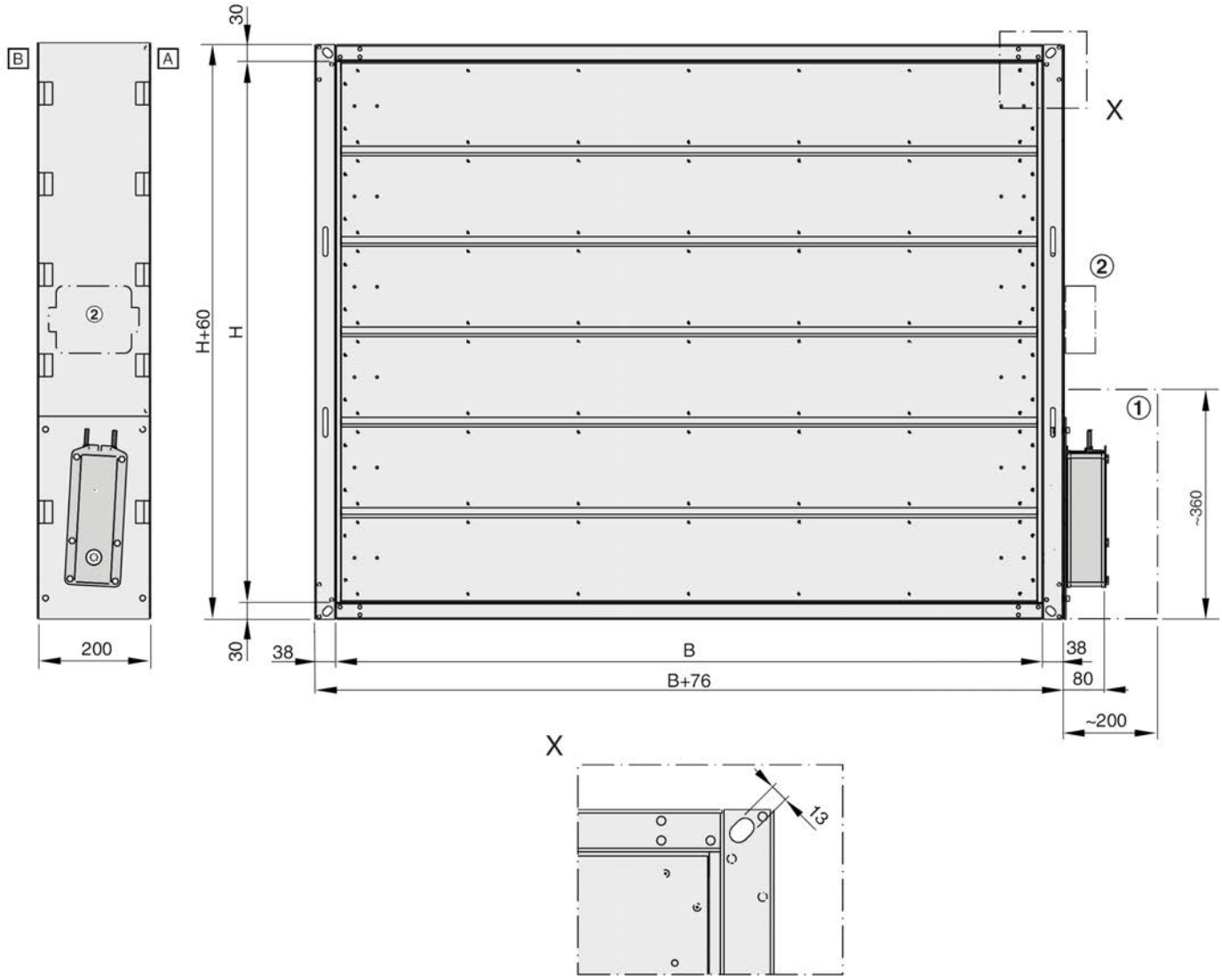

Fig. 2: EK-JS dimensional drawing

A	Installation side
B	Operating side
B	Width
H	Height
B x H	= nominal size = area exposed to the airflow
①	Keep area free for accessibility of the actuator
②	Fixing option for control module, Fixing with self-tapping screws ∅ 4.2 x 9.5 mm (to be provided by others)

Dimensions [mm] and total weight incl. actuator [kg]

H	B																							
	100	150	200	250	300	350	400	450	500	550	600	650	700	750	800	850	900	950	1000	1050	1100	1150	1200	1250
100	7	8	8	8	9	9	9	10	10	10	11	11	11	11	12	12	12	13	13	13	14	14	14	15
125	8	8	8	9	9	9	10	10	10	11	11	11	11	12	12	12	13	13	13	14	14	14	15	15
150	8	8	9	9	9	9	10	10	10	11	11	11	12	12	12	13	13	13	14	14	14	15	15	15
165	8	8	9	9	9	10	10	10	11	11	11	12	12	12	13	13	13	14	14	14	15	15	15	16
320			11	12	13	13	14	15	15	16	17	17	18	19	19	20	21	21	22	23	23	24	25	25
480			13	14	15	16	16	17	18	19	19	20	21	22	22	23	24	25	26	26	27	28	29	29
640			16	16	17	18	19	20	21	21	22	23	24	25	26	27	27	28	29	30	31	32	32	33
800			18	19	20	20	21	22	23	24	25	26	27	28	29	30	31	32	33	34	35	35	36	37
960			20	21	22	23	24	25	26	27	28	29	30	31	32	33	34	35	36	37	38	39	40	42
1120			22	23	24	25	27	28	29	30	31	32	33	34	36	37	38	39	40	42	43	44	45	46
1280			24	25	27	28	29	30	32	33	34	35	37	38	39	41	42	43	44	46	47	48	49	51
1440			26	28	29	30	32	33	34	36	37	39	40	41	43	44	45	47	48	50	51	52	54	55
1600			28	30	31	33	34	36	37	39	40	42	43	45	46	48	49	51	52	54	55	57	58	59
1760			31	32	34	35	37	39	40	42	43	45	47	48	50	51	53	54	56	58	59	62	64	66
1920			33	35	36	38	40	41	43	45	47	48	50	52	53	55	57	58	62	63	65	67	68	70
2080			35	37	39	41	42	44	46	48	50	51	53	55	57	58	62	64	65	67	69	71	73	74
2240			37	39	41	43	45	47	49	51	53	54	56	60	62	64	66	67	69	71	73	75	77	79
2400			40	42	44	46	48	50	52	54	56	59	61	63	65	67	69	71	73	75	77	79	81	83
2560			42	44	46	48	50	52	54	57	60	62	65	67	69	71	73	75	77	79	81	84	86	88

3 Transport and storage

Delivery check

Check delivered items immediately after arrival for transport damage and completeness. In case of any damage or an incomplete shipment, contact the shipping company and your supplier immediately.

A complete shipment includes:

- Smoke control damper(s)
  - Attachments/accessories, if any
- Installation and operating manual (one per shipment)

Fixing and installation material

Fixing and installation material is not part of the supply package (unless stated otherwise), but has to be provided by others; it has to be suitable for the installation situation.

Transport on site

If possible, take the product in its transport packaging up to the installation location.

Bearing

For temporary storage please note:

- Remove any plastic wrapping.
- Protect the product from dust and contamination.
- Store the product in a dry place and away from direct sunlight.
- Do not expose the unit to the effects of weather (not even in its packaging).
- Storage temperature: -30 °C to 50 °C, no condensation.

Packaging

Properly dispose of packaging material.

4 Parts and function

4.1 Overview

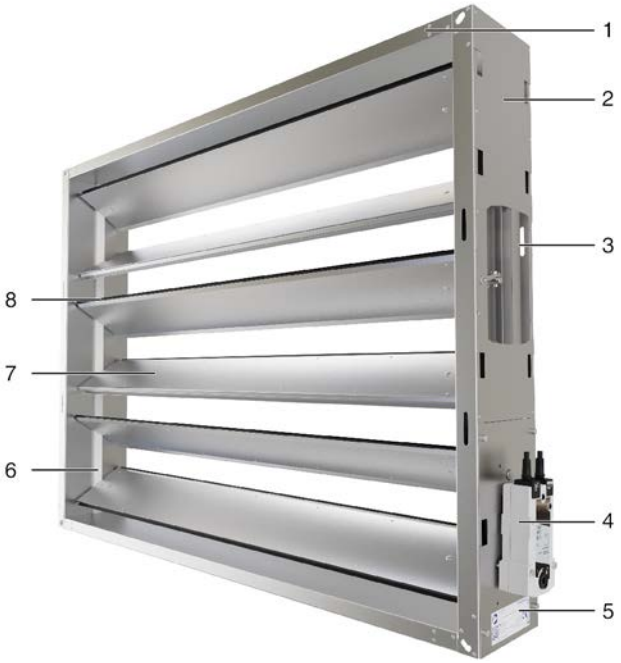

Fig. 3: Smoke control damper EK-JS

1 Enclosure
2 Linkage cover (cut open)
3 Linkage
4 Actuator
5 Rating plate
6 Side seal
7 Damper blades
8 Damper blade profiled seal

4.2 Functional description

Smoke control dampers of the EK-JS series are used in smoke control systems and serve, on the one hand, to remove smoke gases and thermal energy and, on the other hand, to allow fresh air to flow into the area to be kept smoke-free.

The EK-JS is used in pressurised ventilation systems to keep smoke out of

- safety stairwells and their vestibules
- Fire brigade lift shafts
- Escape tunnels

The EK-JS is intended for use in single sections.
It is allowed to be used in combined ventilation/smoke extract systems as a combination damper for smoke extraction as well as for restricting extract air flow rates.

Regular maintenance of the smoke control damper is required to ensure its functional reliability *9 'Maintenance' on page 50* .

Smoke extract

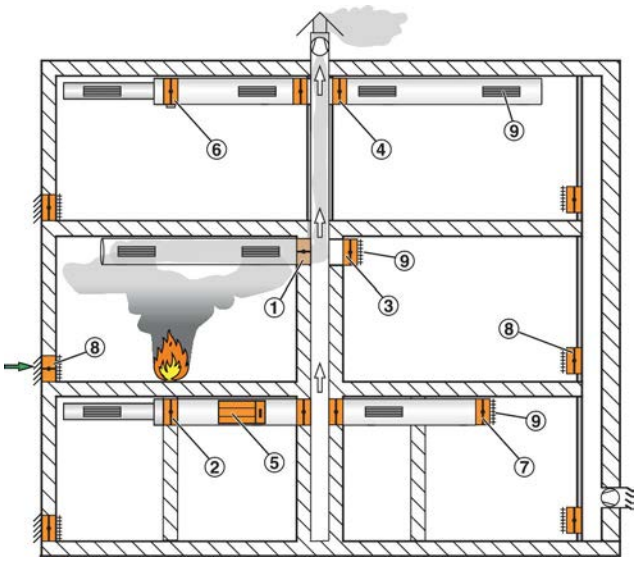

Fig. 4: Smoke extract system

① EK-JZ or EK2-EU in solid shaft wall
② EK-JZ or EK2-EU in solid wall or duct
③ EK-JZ or EK2-EU on solid shaft wall
④ EK-JZ or EK2-EU on a vertical smoke extract duct (shaft)
⑤ EK-JZ or EK2-EU on a horizontal smoke extract duct
⑥ **EK-JS** in a horizontal smoke extract duct
⑦ **EK-JS** at the end of a horizontal smoke extract duct
⑧ **EK-JS**, EK-JZ or EK2-EU as additional supply air inlet
⑨ Cover grilles

Smoke control dampers are completely closed during normal operation. In smoke extraction mode, the smoke control dampers in the affected fire compartment are opened to extract smoke from it. All other smoke control dampers remain closed.

In the event of a fire, smoke control dampers that are used as additional supply air inlets in the affected fire compartment also open so that smoke can be extracted. To ensure the creation of a layer that is nearly free from smoke, smoke control dampers used as additional supply air inlets should be installed near the ground.

The control input signal for the actuator may come from a duct smoke detector or from the central fire alarm system. Using cables with specific circuit integrity for the supply voltage ensures that the actuator is supplied with voltage even in the event of a fire and hence that its function and the communication are maintained.

Supply air and smoke extraction in ventilation systems

When authorised by building authorities or authorised bodies, smoke extract and supply air applications as well as ventilation can be enabled in combined systems with smoke control dampers. Depending on the system layout, the damper blade can be fully opened, fully closed or in the intermediate position. Depending on where the dampers are installed, country-specific regulations may apply to ventilation applications.

5 Installation

5.1 Installation situations

The table lists the various installation types of EK-JS smoke control dampers; for details on the performance level see the declaration of performance.

Installation locations described here may be combined with other installation location characteristics. For example, a smoke control damper may be installed on a vertical smoke extract duct where a horizontal smoke extract duct branches off.

Supporting construction	Construction	Installation location	Installation type	Performance level	Installation information
Horizontal sheet steel smoke extract duct	▪ Sheet steel smoke extract duct tested according to EN 1366-9 ▪ Operating temperature up to 600 °C	on a horizontal duct	LE	E_{600} 120 (v_{ed}, i↔o) S	↳ *18*
		in a horizontal duct			↳ *20*
		at the end of a horizontal duct			↳ *22*
		on top of a horizontal duct		E_{600} 120 (h_{od}, i↔o) S	↳ *24*
Vertical sheet steel smoke extract duct (horizontal sheet steel smoke extract duct with height offset)		on a vertical duct		E_{600} 120 (v_{ed}, i↔o) S	↳ *28*
		in a vertical duct		E_{600} 120 (h_{od}, i↔o) S	↳ *30*
		at the end of a vertical duct			↳ *32*
Vertical solid smoke extract ducts	▪ Operating temperature up to 600 °C	on a vertical duct		E_{600} 120 (v_{ed}, i↔o) S	↳ *34*

LE = As specified for the duct

5.2 Safety notes regarding installation

Sharp edges, sharp corners and thin sheet metal parts

⚠ **CAUTION!**

Danger of injury from sharp edges, sharp corners and thin sheet metal parts!

Sharp edges, sharp corners and thin sheet metal parts may cause cuts or grazes.

– Be careful when carrying out any work.
– Wear protective gloves, safety shoes and a hard hat.

5.3 General installation information

! NOTICE!

Be careful to not damage the smoke control damper

– Protect the smoke control damper from contamination and damage.
– Cover the flange openings and the actuator (e.g. with plastic) to protect them from mortar and dripping water.

Please note:

- Install the smoke control damper without torsion (horizontal/vertical).
- Make sure that no loads are imposed on the casing as this may impair the function of the smoke control damper.
- Smoke control damper and electric actuator must remain accessible for maintenance.

Installation position

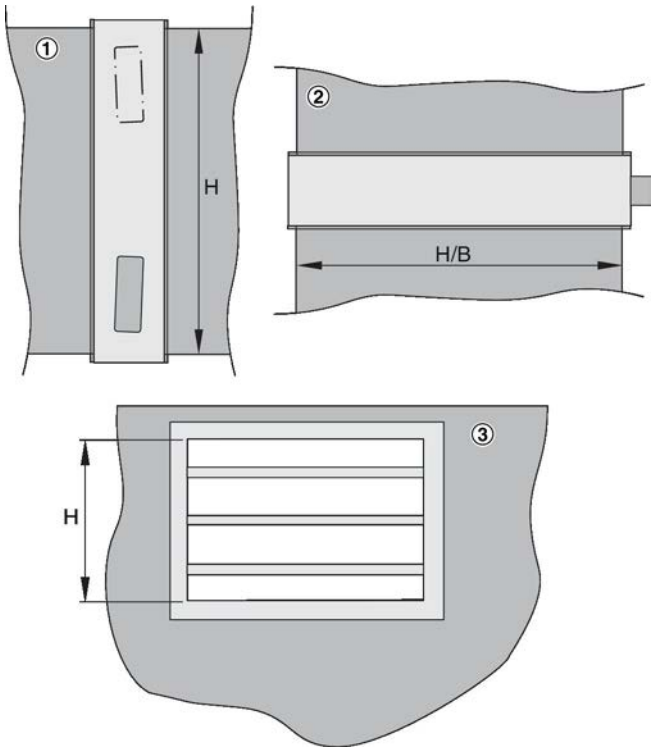

Fig. 5: EK-JS installation position

1 Horizontal smoke extract duct
2 Vertical smoke extract duct (horizontal)
3 Solid smoke extract duct

The EK-JS smoke control damper is only allowed to be installed with the installation position horizontal or lying down.

The position of the actuator is not critical but it must remain accessible for maintenance.

5.3.1 High-temperature sealing tape

High-temperature sealing tape is used to seal between the flange of the smoke control damper and the flange of the sheet steel smoke extract duct and is available as an accessory (accessories 17 and 19)

5.4 Sheet steel smoke extract duct

5.4.1 On a horizontal duct

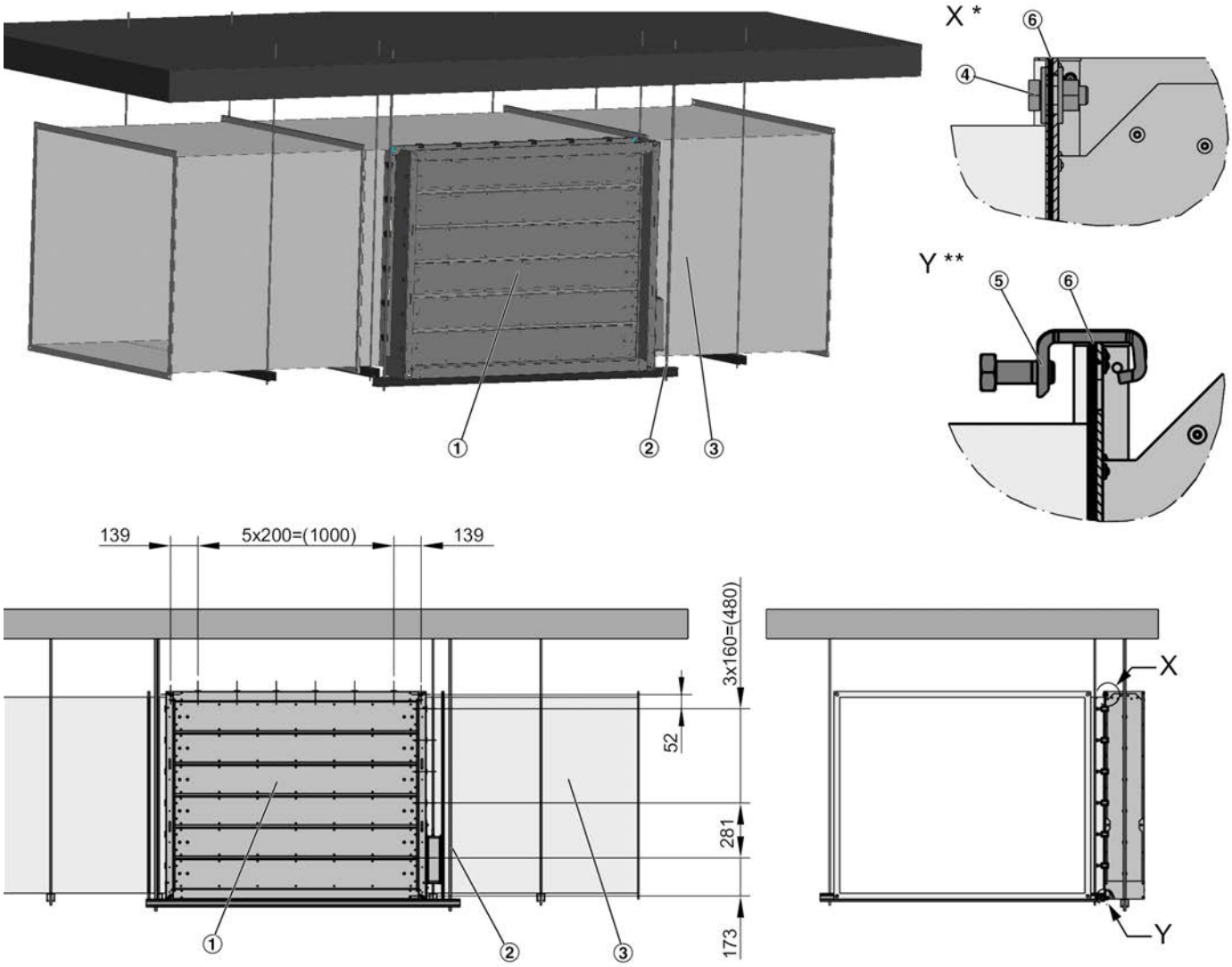

Fig. 6: Installation on a horizontal smoke extract duct

① EK-JS
② Suspension system ↳ *5.6 'Suspending the smoke control damper' on page 36*
③ Sheet steel duct for increased operating temperatures
④ Hexagon bolts M8 with 2 washers and nuts (to be provided by others)
⑤ Duct clips or self-tapping screws ∅ 5.5 x 22 mm (to be provided by others)
⑥ HT sealing tape (accessories or to be provided by others)
* Duct clips not shown
** Hexagon bolts M8 with 2 washers and nut not shown

Classification:

$E_{600}120$ (v_{ed}- i <-> o) S1500 C_{mod} AA single

Personnel:

- Specialist personnel

Requirements:

- Sheet steel duct for increased operating temperatures
- The actuator must remain accessible for maintenance work after installation

1. Manufacture sheet steel duct ③ and cut to length according to manufacturer's instructions.
2. Apply HT sealing tape ⑥ to the flange of the smoke control damper ① for sealing.
3. Manufacture suspension ② for smoke control damper *5.6 'Suspending the smoke control damper' on page 36*.
4. Screw smoke control damper to the sheet steel duct with hexagon bolts, washers and nuts ④.
5. In addition, connect the smoke control damper with duct clips ⑤ or alternatively self-tapping screws *Chapter 6.1 'Smoke extract ducts' on page 37*.

5.4.2 In a horizontal duct

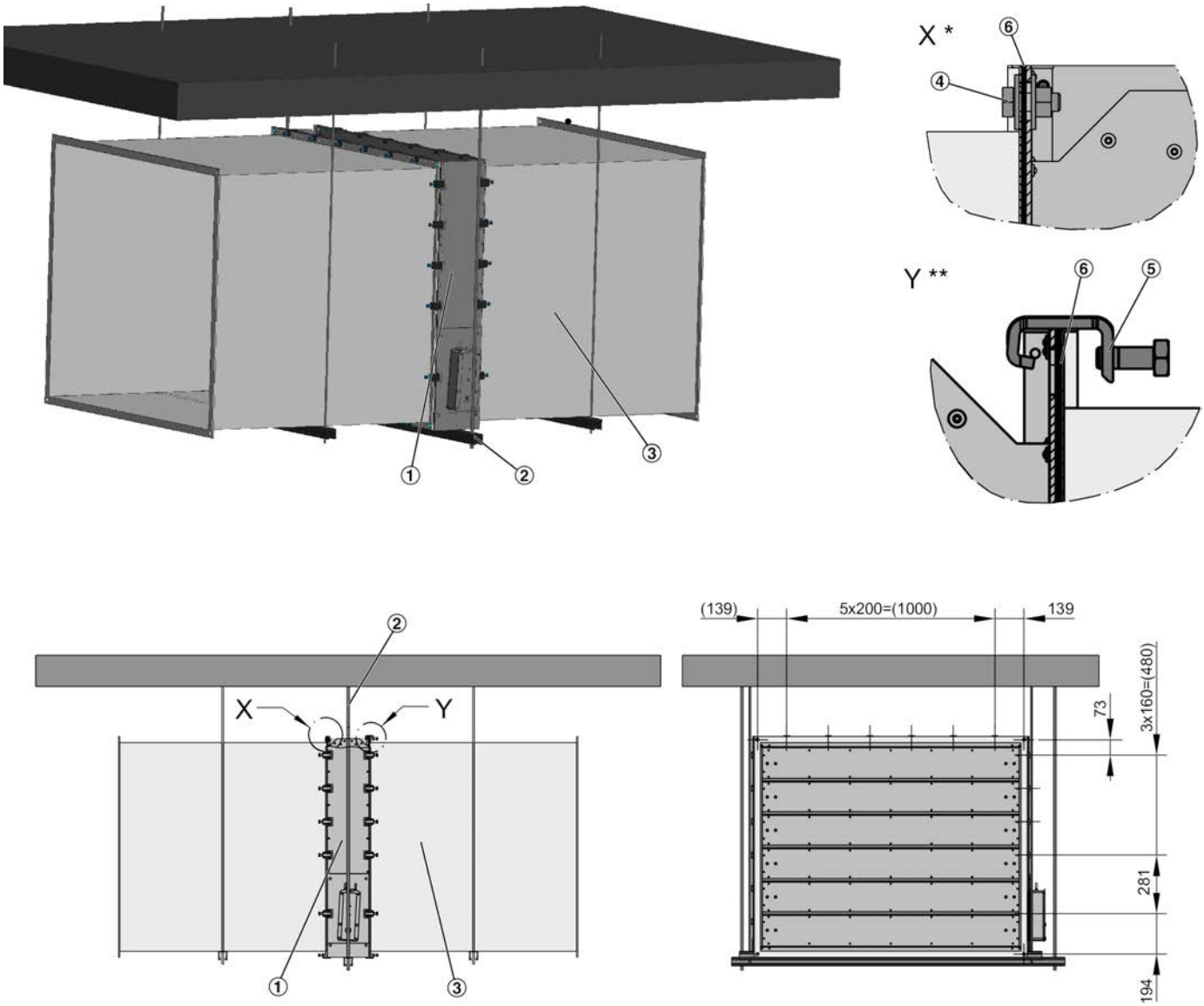

Fig. 7: Installation in a horizontal smoke extract duct

① EK-JS
② Suspension system ☞ *5.6 'Suspending the smoke control damper' on page 36*
③ Sheet steel duct for increased operating temperatures
④ Hexagon bolts M8 with 2 washers and nuts (to be provided by others)
⑤ Duct clips or self-tapping screws ∅ 5.5 x 22 mm (to be provided by others)
⑥ HT sealing tape (accessories or to be provided by others)
* Duct clips not shown
** Hexagon bolts M8 with 2 washers and nut not shown

Classification:

$E_{600}120$ (v_{ed}- i <-> o) S1500 C_{mod} AA single

Personnel:

- Specialist personnel

Requirements:

- Sheet steel duct for increased operating temperatures
- The actuator must remain accessible for maintenance work after installation

1. Manufacture sheet steel duct ③ and cut to length according to manufacturer's instructions.
2. Apply HT sealing tape ⑥ to the flange of the smoke control damper ① for sealing.
3. Manufacture suspension ② for smoke control damper ↳ *5.6 'Suspending the smoke control damper' on page 36* .
4. Screw smoke control damper to the sheet steel duct with hexagon bolts, washers and nuts ④.
5. In addition, connect the smoke control damper with duct clips ⑤ or alternatively self-tapping screws ↳ *Chapter 6.1 'Smoke extract ducts' on page 37* .

5.4.3 At the end of a horizontal duct

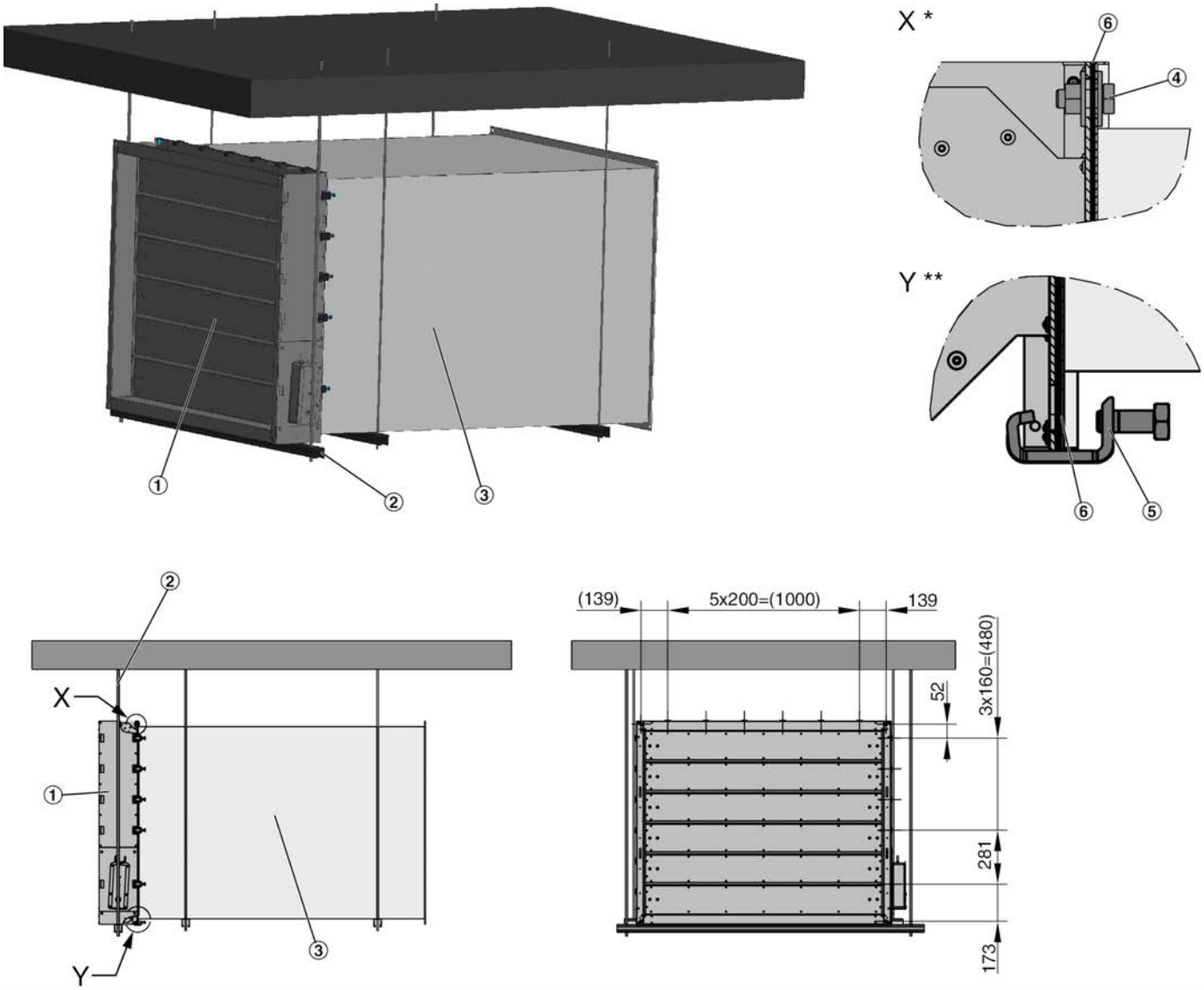

Fig. 8: Installation at the end of a horizontal smoke extract duct

① EK-JS
② Suspension system ↳ *5.6 'Suspending the smoke control damper' on page 36*
③ Sheet steel duct for increased operating temperatures
④ Hexagon bolts M8 with 2 washers and nuts (to be provided by others)
⑤ Duct clips or self-tapping screws ∅ 5.5 x 22 mm (to be provided by others)
⑥ HT sealing tape (accessories or to be provided by others)
* Duct clips not shown
** Hexagon bolts M8 with 2 washers and nut not shown

Classification:

$E_{600}120$ (v_{ed}- i <-> o) S1500 C_{mod} AA single

Personnel:

- Specialist personnel

Requirements:

- Sheet steel duct for increased operating temperatures
- The actuator must remain accessible for maintenance work after installation

1. Manufacture sheet steel duct ③ and cut to length according to manufacturer's instructions.
2. Apply HT sealing tape ⑥ to the flange of the smoke control damper ① for sealing.
3. Manufacture suspension ② for smoke control damper ↳ *5.6 'Suspending the smoke control damper' on page 36* .
4. Screw smoke control damper to the sheet steel duct with hexagon bolts, washers and nuts ④.
5. In addition, connect the smoke control damper with duct clips ⑤ or alternatively self-tapping screws ↳ *Chapter 6.1 'Smoke extract ducts' on page 37* .

5.4.4 On a horizontal duct

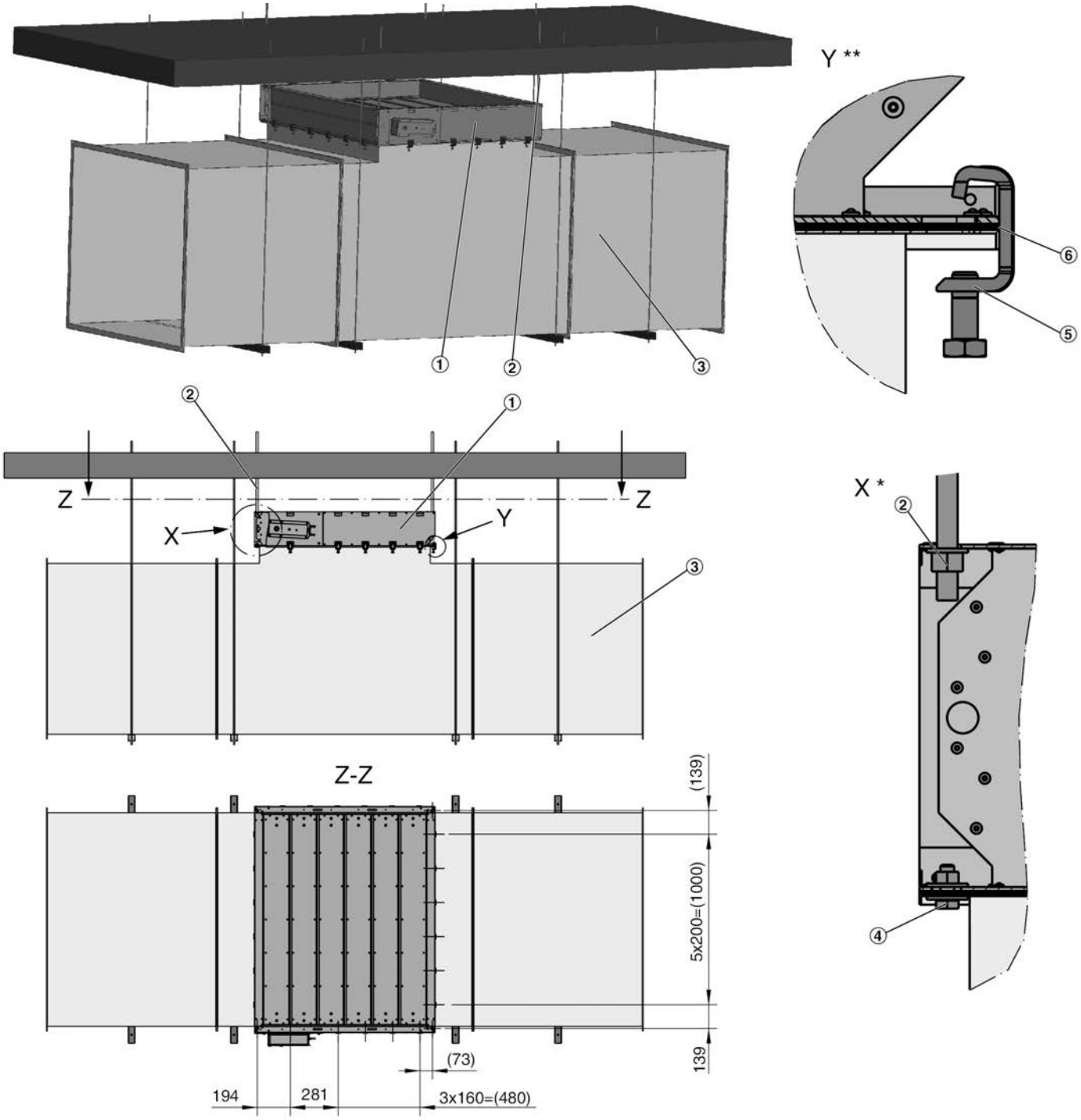

Fig. 9: Installation on a horizontal smoke extract duct

① EK-JS
② Suspension system ☞ *5.6 'Suspending the smoke control damper' on page 36*
③ Sheet steel duct for increased operating temperatures
④ Hexagon bolts M8 with 2 washers and nuts (to be provided by others)
⑤ Duct clips or self-tapping screws ∅ 5.5 x 22 mm (to be provided by others)
⑥ HT sealing tape (accessories or to be provided by others)
* Duct clips not shown
** Hexagon bolts M8 with 2 washers and nut not shown

Classification:

$E_{600}120$ (h_{od}- i <-> o) S1500 C_{mod} AA single

Personnel:

- Specialist personnel

Requirements:

- Sheet steel duct for increased operating temperatures
- The actuator must remain accessible for maintenance work after installation

1. Manufacture sheet steel duct ③ and cut to length according to manufacturer's instructions.
2. Apply HT sealing tape ⑥ to the flange of the smoke control damper ① for sealing.
3. Manufacture suspension ② for smoke control damper ↳ *5.6 'Suspending the smoke control damper' on page 36* .
4. Screw smoke control damper to the sheet steel duct with hexagon bolts, washers and nuts ④.
5. In addition, connect the smoke control damper with duct clips ⑤ or alternatively self-tapping screws ↳ *Chapter 6.1 'Smoke extract ducts' on page 37* .

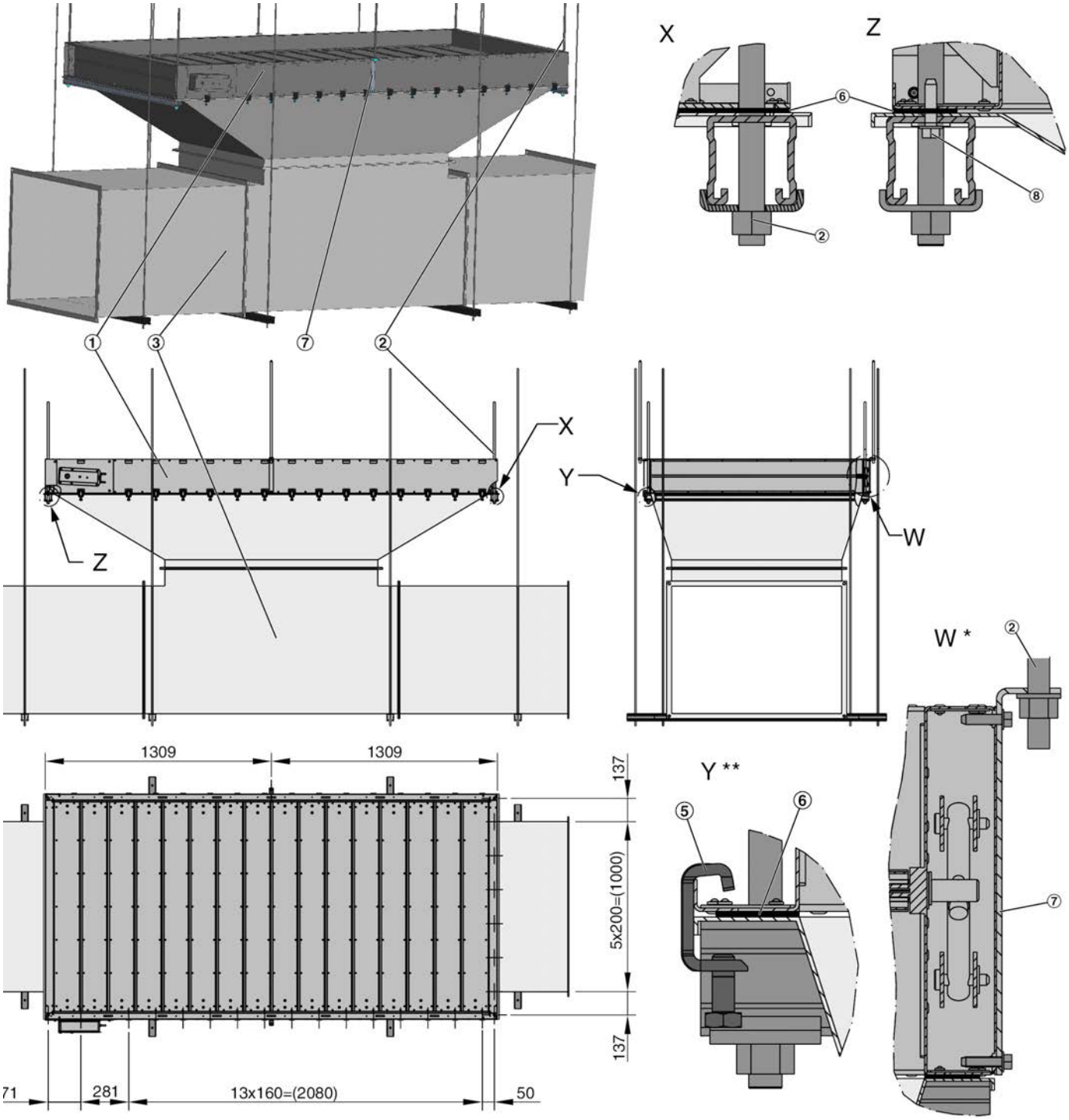

Fig. 10: Installation on a horizontal smoke extract duct

① EK-JS
② Suspension system ↳ *5.6 'Suspending the smoke control damper' on page 36*
③ Sheet steel duct for increased operating temperatures
④ Hexagon bolts M8 with 2 washers and nuts (to be provided by others)
⑤ Duct clips or self-tapping screws ∅ 5.5 x 22 mm (to be provided by others)
⑥ HT sealing tape (accessories or to be provided by others)
⑦ Suspension bracket fixed with 2 self-tapping screws, ↳ *5.6 'Suspending the smoke control damper' on page 36*
⑧ Self-tapping screws ∅ 5.5 x 22 mm with ∅6 mm washers (to be provided by others)
* Duct clips not shown
** Hexagon bolts M8 with 2 washers and nut not shown

Classification:

$E_{600}120$ (h_{od}- i <-> o) S1500 C_{mod} AA single

Personnel:

- Specialist personnel

Requirements:

- Sheet steel duct for increased operating temperatures
- The actuator must remain accessible for maintenance work after installation

1. Manufacture sheet steel duct ③ and cut to length according to manufacturer's instructions.
2. Apply HT sealing tape ⑥ to the flange of the smoke control damper ① for sealing.
3. Manufacture suspension ② for smoke control damper *5.6 'Suspending the smoke control damper' on page 36*.
4. Screw smoke control damper to the sheet steel duct with hexagon bolts, washers and nuts ④.
5. In addition, connect the smoke control damper with duct clips ⑤ or alternatively self-tapping screws *Chapter 6.1 'Smoke extract ducts' on page 37*.

5.4.5 On a vertical duct

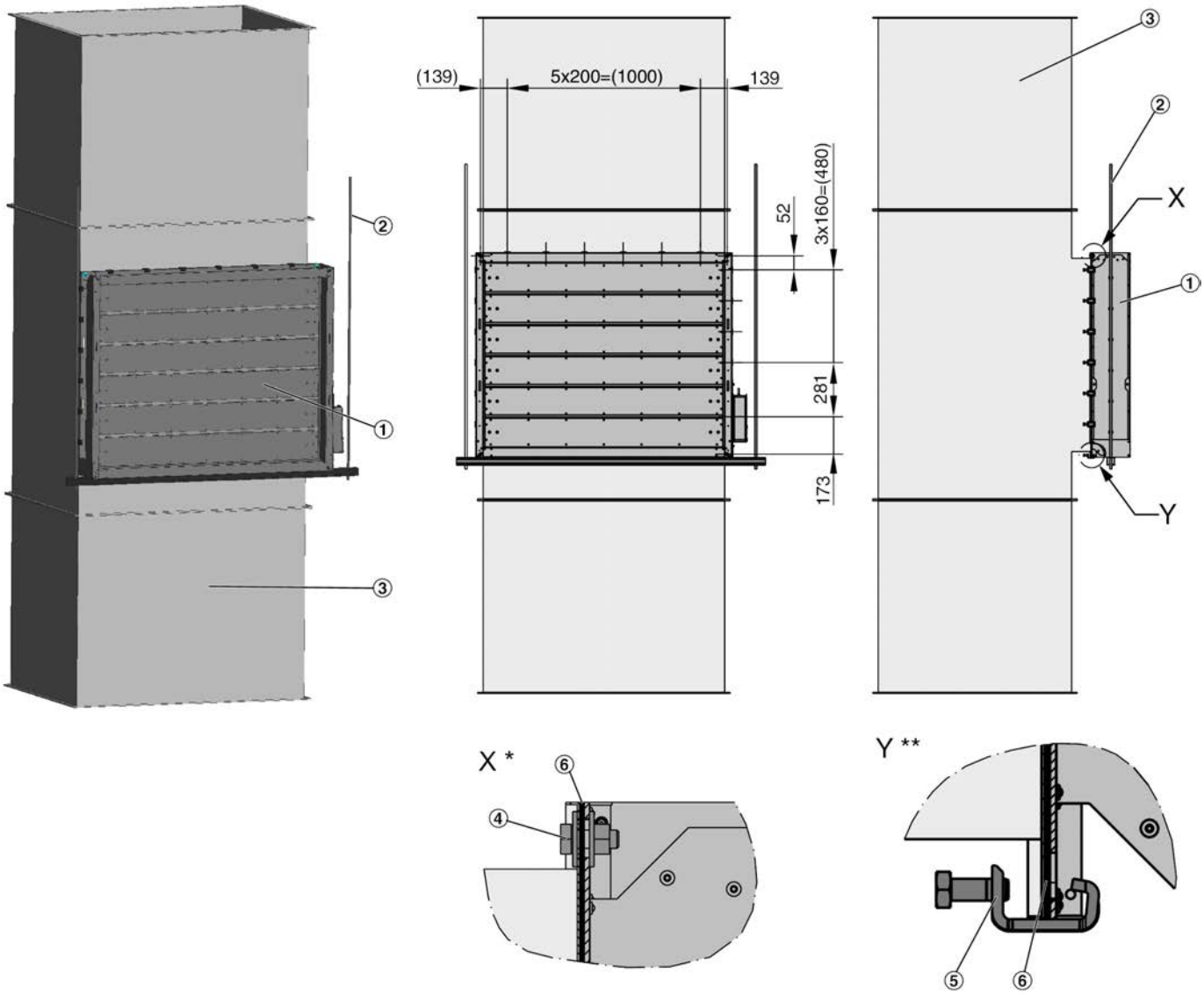

Fig. 11: Installation on a vertical smoke extract duct

① EK-JS
② Suspension system ☞ *5.6 'Suspending the smoke control damper' on page 36*
③ Sheet steel duct for increased operating temperatures
④ Hexagon bolts M8 with 2 washers and nuts (to be provided by others)
⑤ Duct clips or self-tapping screws ∅ 5.5 x 22 mm (to be provided by others)
⑥ HT sealing tape (accessories or to be provided by others)
* Duct clips not shown
** Hexagon bolts M8 with 2 washers and nut not shown

Classification:

$E_{600}120$ (v_{ed}- i <-> o) S1500 C_{mod} AA single

Personnel:

- Specialist personnel

Requirements:

- Sheet steel duct for increased operating temperatures
- The actuator must remain accessible for maintenance work after installation

1. Manufacture sheet steel duct ③ and cut to length according to manufacturer's instructions.
2. Apply HT sealing tape ⑥ to the flange of the smoke control damper ① for sealing.
3. Manufacture suspension ② for smoke control damper *5.6 'Suspending the smoke control damper' on page 36*.
4. Screw smoke control damper to the sheet steel duct with hexagon bolts, washers and nuts ④.
5. In addition, connect the smoke control damper with duct clips ⑤ or alternatively self-tapping screws *Chapter 6.1 'Smoke extract ducts' on page 37*.

5.4.6 In a vertical duct

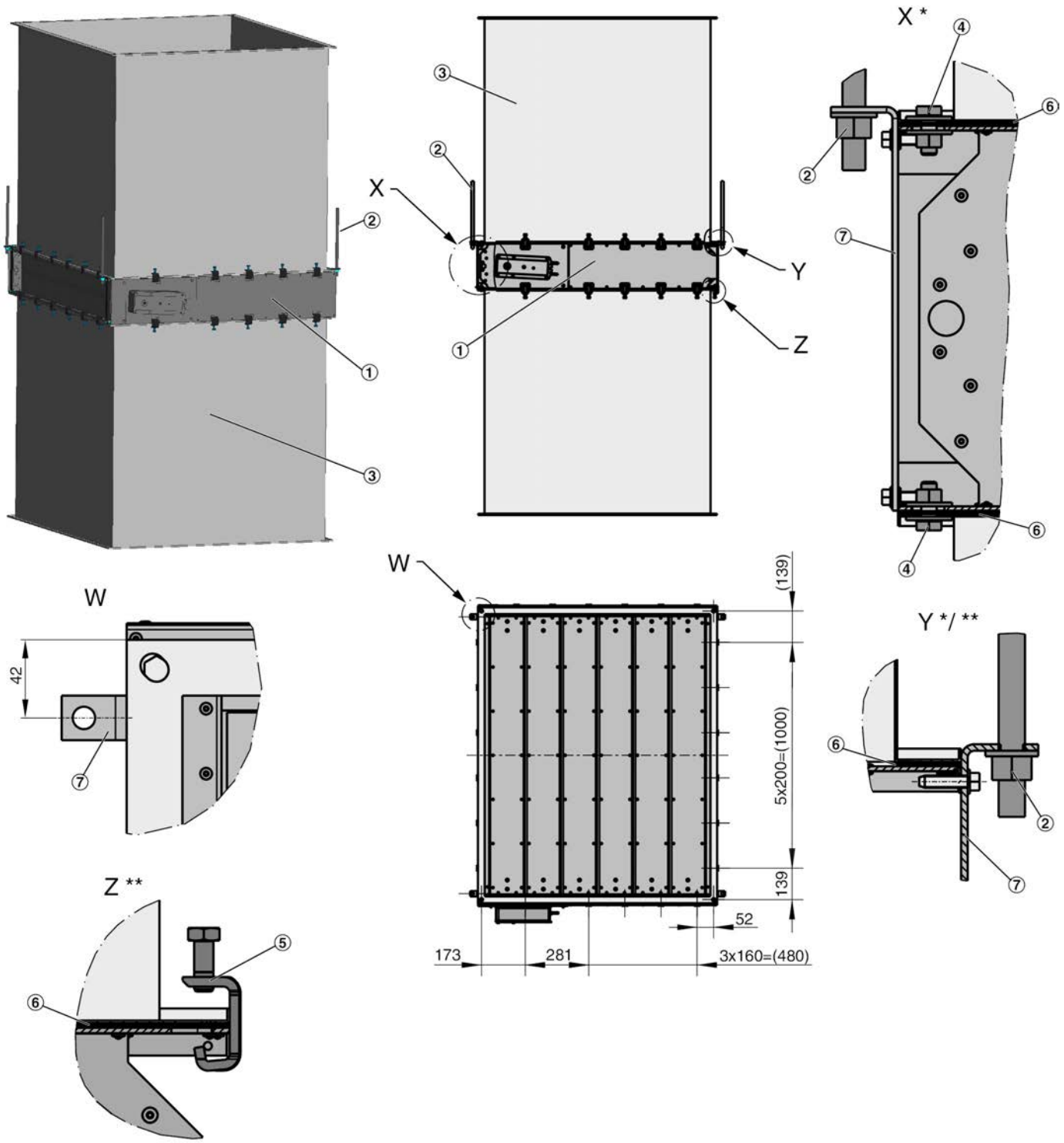

Fig. 12: Installation in a vertical smoke extract duct

① EK-JS
② Suspension system ↳ *5.6 'Suspending the smoke control damper' on page 36*
③ Sheet steel smoke extract duct
④ Hexagon bolts M8 with 2 washers and nuts (to be provided by others)
⑤ Duct clips or self-tapping screws ∅ 5.5 x 22 mm (to be provided by others)
⑥ HT sealing tape (accessories or to be provided by others)
⑦ Suspension bracket fixed with 2 self-tapping screws, ↳ *5.6 'Suspending the smoke control damper' on page 36*
* Duct clips not shown
** Hexagon bolts M8 with 2 washers and nut not shown

Classification:

$E_{600}120$ (h_{od}- i <-> o) S1500 C_{mod} AA single

Personnel:

- Specialist personnel

Requirements:

- Sheet steel duct for increased operating temperatures
- The actuator must remain accessible for maintenance work after installation

1. Manufacture sheet steel duct ③ and cut to length according to manufacturer's instructions.
2. Apply HT sealing tape ⑥ to the flange of the smoke control damper ① for sealing.
3. Manufacture suspension ② for smoke control damper *5.6 'Suspending the smoke control damper' on page 36*.
4. Screw smoke control damper to the sheet steel duct with hexagon bolts, washers and nuts ④.
5. In addition, connect the smoke control damper with duct clips ⑤ or alternatively self-tapping screws *Chapter 6.1 'Smoke extract ducts' on page 37*.

5.4.7 At the end of a vertical duct

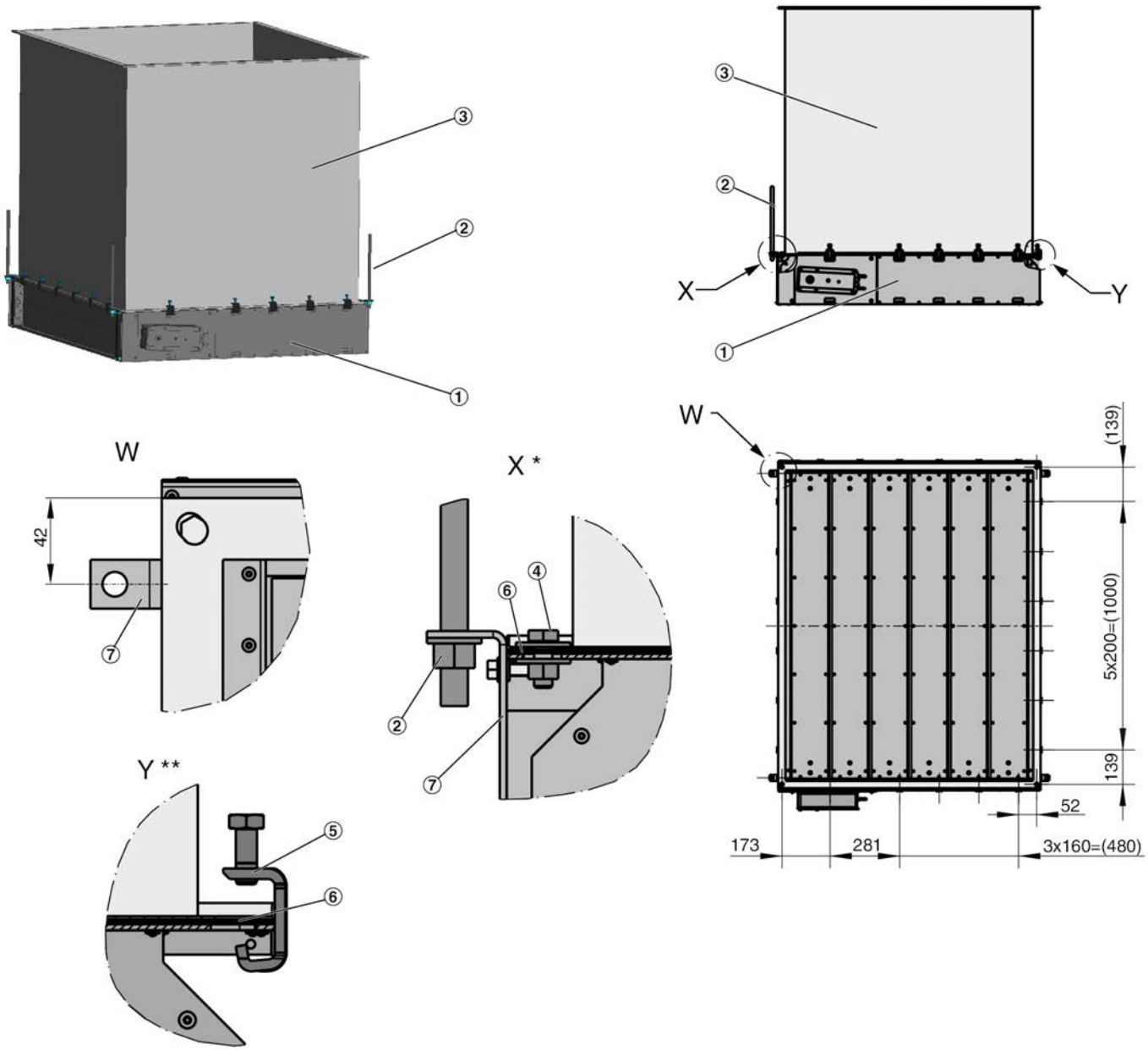

Fig. 13: Installation at the end of a vertical smoke extract duct

① EK-JS
② Suspension system ↳ *5.6 'Suspending the smoke control damper' on page 36*
③ Sheet steel smoke extract duct
④ Hexagon bolts M8 with 2 washers and nuts (to be provided by others)
⑤ Duct clips or self-tapping screws ∅ 5.5 x 22 mm (to be provided by others)
⑥ HT sealing tape (accessories or to be provided by others)
⑦ Suspension bracket fixed with 2 self-tapping screws, ↳ *5.6 'Suspending the smoke control damper' on page 36*
* Duct clips not shown
** Hexagon bolts M8 with 2 washers and nut not shown

Classification:

$E_{600}120$ (h_{od}- i <-> o) S1500 C_{mod} AA single

Personnel:

- Specialist personnel

Requirements:

- Sheet steel duct for increased operating temperatures
- The actuator must remain accessible for maintenance work after installation

1. Manufacture sheet steel duct ③ and cut to length according to manufacturer's instructions.
2. Apply HT sealing tape ⑥ to the flange of the smoke control damper ① for sealing.
3. Manufacture suspension ② for smoke control damper ↳ *5.6 'Suspending the smoke control damper' on page 36* .
4. Screw smoke control damper to the sheet steel duct with hexagon bolts, washers and nuts ④.
5. In addition, connect the smoke control damper with duct clips ⑤ or alternatively self-tapping screws ↳ *Chapter 6.1 'Smoke extract ducts' on page 37* .

5.5 Solid smoke extract duct

5.5.1 On a vertical solid duct

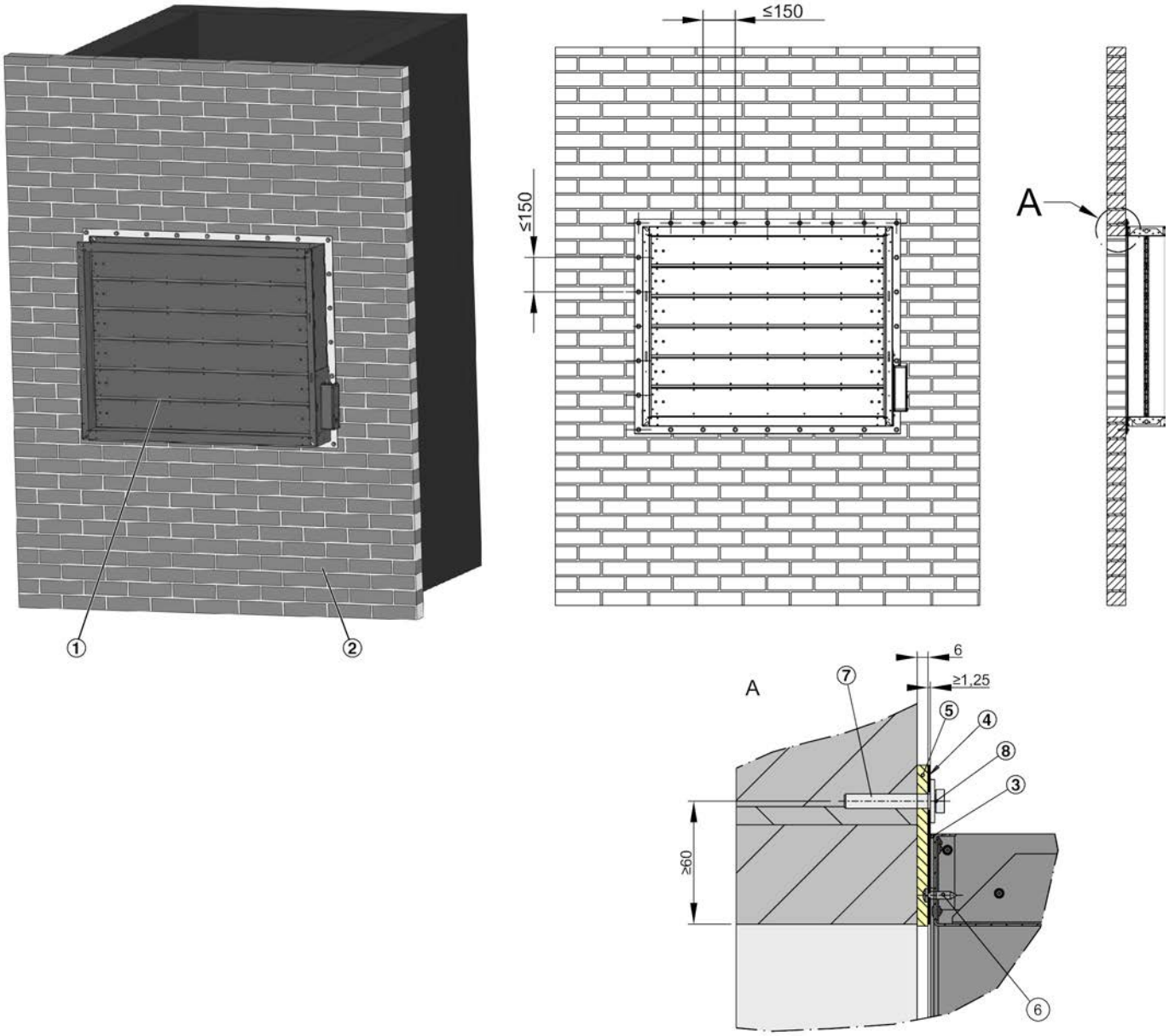

Fig. 14: Installation in a vertical solid smoke extract duct

① EK-JS
② Solid shaft wall as part of a smoke extract duct
③ HT sealing tape (accessory) or to be provided by others
④ Flange (to be provided by others), ↳ *54*
⑤ HT sealing tape (to be provided by others)
⑥ Self-tapping screws ∅ 4.2 x 16 mm (to be provided by others)
⑦ Wallplug with fire safety engineering certification and threaded bolts M8 (to be provided by others)
⑧ Washer, nut M8 (to be provided by others)

Classification:

$E_{600}120$ (v_{ed}- i <-> o) S1500 C_{mod} AA single

Personnel:

- Specialist personnel

Requirements:

- Solid shaft wall as part of a smoke extract duct
- The actuator must remain accessible for maintenance work after installation

1. To seal between the EK-JS ① and the flange ④, apply HT sealing tape ③ to the damper housing.
2. Fix the flange ④ (to be provided by others) to the EK-JS with self-tapping screws ⑥.
3. For sealing, stick the HT sealing tape ⑤ onto the flange.
4. Drill the holes on the shaft wall according to the hole pattern on the flange, maximum distance between the holes 150 mm. Insert the wallplugs into the holes.
5. Screw the smoke control damper to the solid smoke extract duct with washers and nuts ⑧.

5.6 Suspending the smoke control damper

5.6.1 General

Smoke control dampers can be suspended from solid ceiling slabs using adequately sized threaded rods. Load the suspension system only with the weight of the smoke control damper.

Ducts must be suspended separately.

Suspension systems longer than 1.5 m require fire-resistant insulation.

Size of threaded rods

Thread	M8	M10	M12	M14	M16	M20
Fmax [N] per threaded rod	219	348	505	690	942	1470
Maximum loading [kg] per threaded rod	22	35	52	70	96	150

5.6.2 Fixing the unit to the ceiling slab

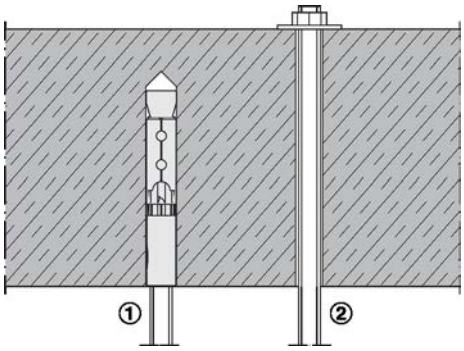

Fig. 15: Fixing to the ceiling slab

1 Fire-rated anchor (with suitability certificate)
2 Push through installation

Use only fire-rated steel anchors with suitability certificate. Instead of anchors, you can use threaded rods and secure them using nuts and washers.

5.6.3 Suspended installation

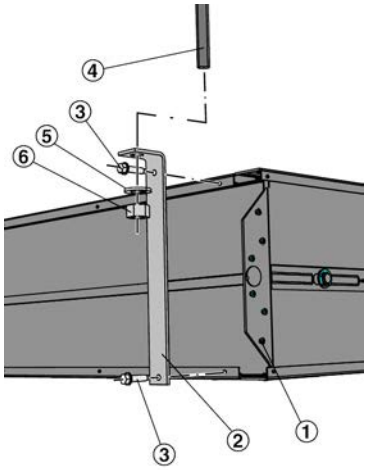

Fig. 16: EK-JS suspension with suspension bracket

① Smoke control damper EK-JS
② Suspension bracket (accessory 18, 19)*
③ Self-tapping screws (supply package of suspension bracket)
④ Threaded rod M12
⑤ Washer M12, galvanised steel
⑥ Nut M12, galvanised steel

* When a cover grille is used, the suspension bracket can be attached rotated by 180°.

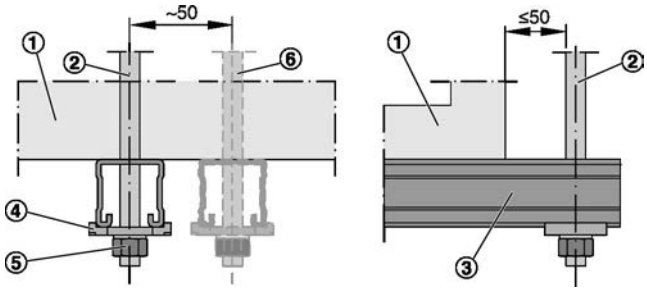

Fig. 17: Suspended installation

① Smoke control damper
② Threaded rod ↳ *'Size of threaded rods' on page 36*
③ Hilti mounting rail MQ 41 × 3 or equivalent
④ Hilti MQZ-L drilled plate or equivalent
⑤ Galvanised steel nut
⑥ Additional suspension (only if necessary)

6 Smoke extract duct and cover grille

6.1 Smoke extract ducts

Construction of the duct

EK-JS smoke control dampers are allowed to be used with sheet steel smoke extract ducts for individual sections that meet the following criteria:

- Tested according to DIN EN 1366-9, 120 min. at 600 °C
- Pressure level 3 according to DIN EN 1366-9 for negative pressure down to -1500 Pa and positive pressure up to +500 Pa

Smoke extract ducts with national general building inspectorate licences

Smoke extract ducts can also be connected with a national general building inspectorate licence or a national general appraisal certificate. If the smoke control damper is not exposed to mechanical forces, the functional stability of the smoke control damper is not affected (connection according to assembly and operating manual of the smoke control damper). The sizing of the smoke extract duct used remains the responsibility of the system installer and the system owner and must be approved with the respective national authority.

Sheet steel smoke extract duct

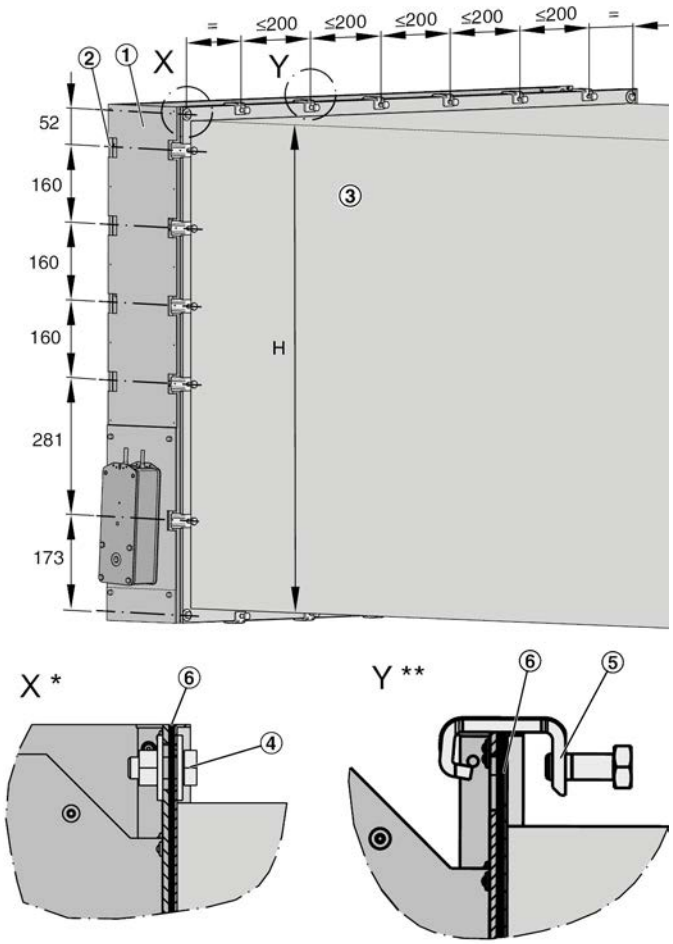

Fig. 18: EK-JS connection to air duct with duct clips

① EK-JS
② Linkage cover with recess for duct clips
③ Smoke extract duct
④ Fixing screws M8 with washers and nut (to be provided by others)
⑤ Duct clips or self-tapping screws ∅ 5.5 x 22 mm (to be provided by others)
⑥ HT sealing tape (accessories or to be provided by others)
* Duct clips not shown
** Hexagon bolts M8 with 2 washers and nut not shown

Place the duct clips on the drive side in the recesses of the linkage cover.

On the other sides, the duct clips can be set freely. Maximum distance 200 mm.

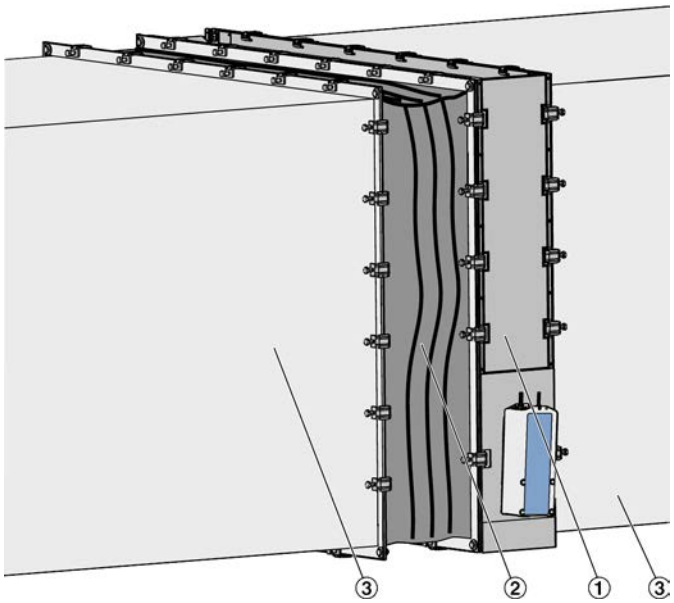

Fig. 19: EK-JS connection to a sheet steel smoke extract duct

① EK-JS
② Flexible connector (by others)
③ Sheet steel smoke extract duct (by others)

As ducts may expand in the event of a fire, we recommend using flexible connectors at one end when connecting a sheet steel smoke extract duct which is attached at both ends. The flexible connectors should meet the specifications for the sheet steel smoke extract duct. Be sure to follow the manufacturer's instructions.

6.2 Cover grilles

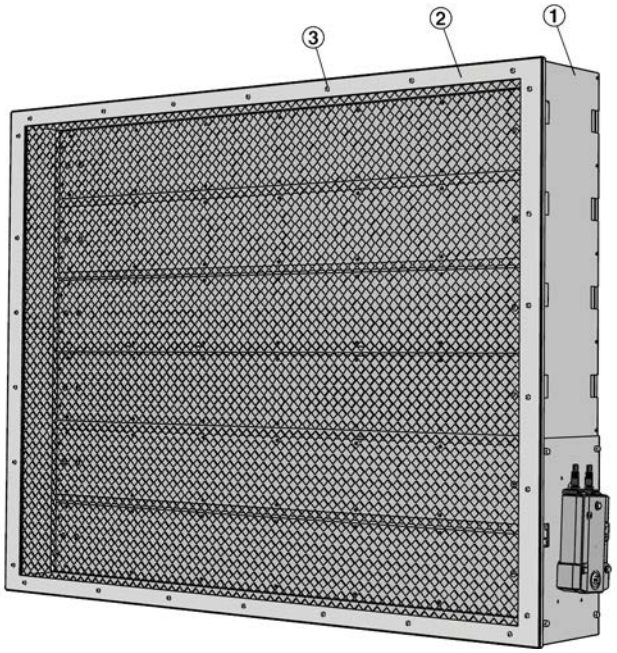

Fig. 20: EK-JS with a cover grille

① EK-JS
② Cover grilles
③ Fixing screws

If no smoke extract duct is connected to the smoke control damper, it will be necessary to protect the end with a cover grille (accessory or to be provided by others: galvanised steel, mesh aperture ≤ 20 mm).

7 Electrical connection

7.1 General safety notes

Personnel:

- Skilled qualified electrician

DANGER!

Danger of electric shock! Do not touch any live components! Electrical equipment carries a dangerous electrical voltage.

– Only skilled qualified electricians are allowed to work on the electrical system.
– Switch off the power supply before working on any electrical equipment.

7.2 Wiring and connection to the central BMS

Supply voltage

- The smoke control damper may be equipped with a 230 V AC or a 24 V AC/DC actuator. See the performance data on the actuator rating plate.
- Several actuators can be connected in parallel as long as the performance specifications and switching thresholds are taken into consideration.
- Make electrical connections according to the examples below.

Auxiliary switch

- During application, it must be ensured that the contacts of the auxiliary switches can no longer be used in the milliampere range once they have been wired up to a relatively high current.
- A combination of mains and protective extra-low voltage is not permitted for the auxiliary switches.

Functional integrity of electrical wiring systems

Electrical wiring systems for supplying power to smoke control dampers, for example in mechanical smoke control systems and pressurisation systems, must be designed with a functional integrity of at least 90 minutes. If electrical wiring systems are installed in safety stairwells, functional integrity must be guaranteed for at least 30 minutes.

Actuators with 24 V AC/DC

Safety transformers must be used. The connecting cables are fitted with plugs. This ensures quick and easy connection to the TROX AS-i bus system. For connection to the terminals, shorten the connecting cable.

7.3 Actuators

7.3.1 B24

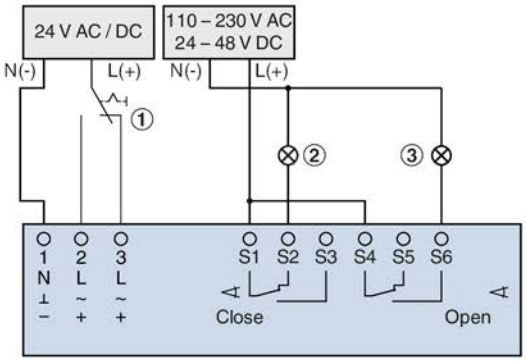

Fig. 21: Wiring example 24 V AC / DC

① Switch for opening and closing, to be provided by others
② Indicator light for CLOSED position, to be provided by others
③ Indicator light for OPEN position, to be provided by others

Technical data for open/close actuators

Order code detail		**B24**		
Actuator		**BEN24-ST TR**	**BEE24-ST TR**	**BE24-ST TR**
Supply voltage		AC 19.2...28.8 V, 50/60 Hz / DC 21.6...28.8 V, 50/60 Hz		
Power consumption – when running		3 W	2.5 W	12 W
Power consumption – when idle		0.1 W		0.5 W
Power consumption rating		6 VA	5 VA	18 VA
		8.2 A, Imax. (5 ms)		8.2 A, Imax. (5 ms)
Torque		15 Nm	25 Nm	40 Nm
Run time		< 30 s (90°)	< 60 s (90°)	< 60 s (90°)
Limit switch	Type of contact	2 changeover contacts		
	Switch rating	1 mA...3 A (0.5 A inductive),		1 mA...6 (0.5 A inductive),
	Switching voltage	5 VDC...250 VAC		
	Open	5°		3°
	Close	80°		87°
IEC protection class		III (SELV)		
Protection level		IP 54		
Operating temperature		-30...55 °C		
Connecting cable	Actuator	1 m, 3 x 0.75 mm², halogen-free		
	Limit switch	1 m, 6 x 0.75 mm², halogen-free		
CE conformity according to		2014/30/EU, 2014/35/EU		

7.3.2 B230

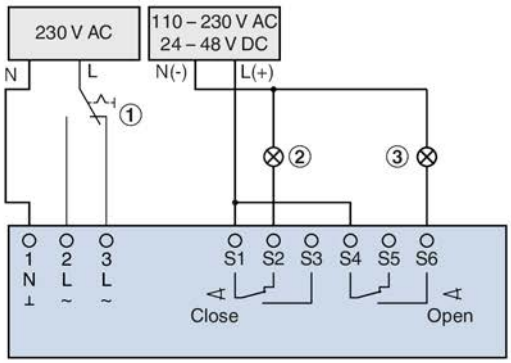

Fig. 22: Wiring example 230 V AC

① Switch for opening and closing, to be provided by others
② Indicator light for CLOSED position, to be provided by others
③ Indicator light for OPEN position, to be provided by others

Technical data for open/close actuators

Order code detail		**B230**		
Actuator		**BEN230 TR**	**BEE230 TR**	**BE230 TR**
Supply voltage		AC 198 … 264 V 50/60 Hz		
Power consumption – when running		4 W	3.5 W	8 W
Power consumption – when idle		0.4 W		0.5 W
Power consumption rating		7 VA	6 VA	15 VA
		4 A, Imax. (5 ms)		7.9 A, Imax. (5 ms)
Torque		15 Nm	25 Nm	40 Nm
Run time		< 30 s (90°)	< 60 s (90°)	< 60 s (90°)
Limit switch	Type of contact	2 changeover contacts		
	Switch rating	1 mA...3 A (0.5 A inductive),		1 mA...6 A (0.5 A inductive),
	Switching voltage	5 V DC...250 V AC		
	Open	5°		3°
	Close	80°		87°
IEC protection class		II		
Protection level		IP 54		
Operating temperature		-30...55 °C		-30...50 °C
Connecting cable	Actuator	1 m, 3 x 0.75 mm², halogen-free		
	Limit switch	1 m, 6 x 0.75 mm², halogen-free		
CE conformity according to		2014/30/EU, 2014/35/EU		

7.3.3 B24-SR

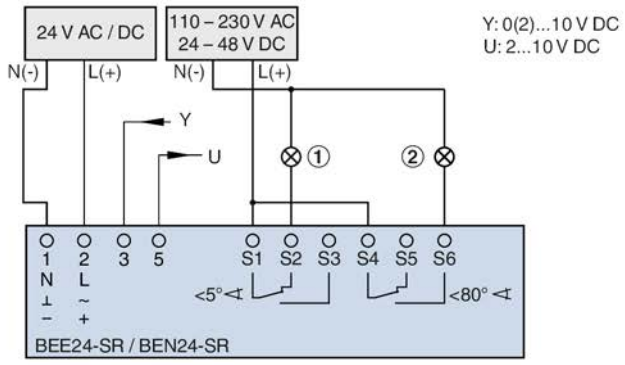

Fig. 23: Wiring example 24 V AC / DC, modulating

① Indicator light for CLOSED position, to be provided by others
② Indicator light for OPEN position, to be provided by others

Y Working range (target value)
U Position feedback (actual value)

Attention:

- An input voltage of 0(2)...10 V DC at the operating range Y (terminal 3) is essential as the control input signal for the actuator!
  - 0(2) V DC = closed
  - 10 V DC = opened
- Terminal 1 is used as a common earth contact for the operating range Y as well as the position feedback U.
- The current must be limited to max. 0.5 mA for measuring the position feedback (actual value)!
- In addition, observe the following instructions *Chapter 7.2 'Wiring and connection to the central BMS' on page 39*

Technical data of continuously controlled actuators

Order code detail		**B24-SR**	
Actuator		**BEN24-SR TR**	**BEE24-SR TR**
Supply voltage supply with safety transformer		AC 19.2...28.8 V, 50/60 Hz / DC 21.6...28.8 V, 50/60 Hz	
Power consumption – when running		3 W	3 W
Power consumption – when idle		0.3 W	
Power consumption rating		6.5 VA	5.5 VA
		8.2 A, Imax. (5 ms)	
Torque		15 Nm	25 Nm
Run time		< 30 s (90°)	< 60 s (90°)
Work area Y		2...10 V DC	
Input resistance		100 kΩ	
Position feedback signal		2...10 V DC, max. 0.5 mA	
Positional accuracy		±5%	
Limit switch	Type of contact	2 changeover contacts	
	Switch rating	1 mA...3 A (0.5 A inductive), AC 250 V	
IEC protection class		III (SELV)	
Protection level		IP 54	

Order code detail		B24-SR	
Actuator		**BEN24-SR TR**	**BEE24-SR TR**
Operating temperature		-30...55 °C	
Connecting cable	Actuator	1 m, 4 x 0.75 mm², halogen-free	
	Limit switch	1 m, 6 x 0.75 mm², halogen-free	
CE conformity according to		2014/30/EU, 2014/35/EU	

7.4 Actuator with control module

Smoke control dampers in a smoke extract system can be activated individually or as part of an overall system and according to the control matrix set up for the event of a fire. In this case the control system of the mechanical smoke extract system or pressurisation system also controls and monitors the status of the dampers. If there are integral communication modules fitted inside the encasing, they can be connected to the actuator and establish the communication with the control system as well as the power supply.

7.4.1 TROXNETCOM B24A, B24AM, B24AS

- A controller (master) communicates with the control modules (slaves, up to 31 per master)
- Free bus topology of the two-wire cable for data and energy
- Simple and intelligent wiring system

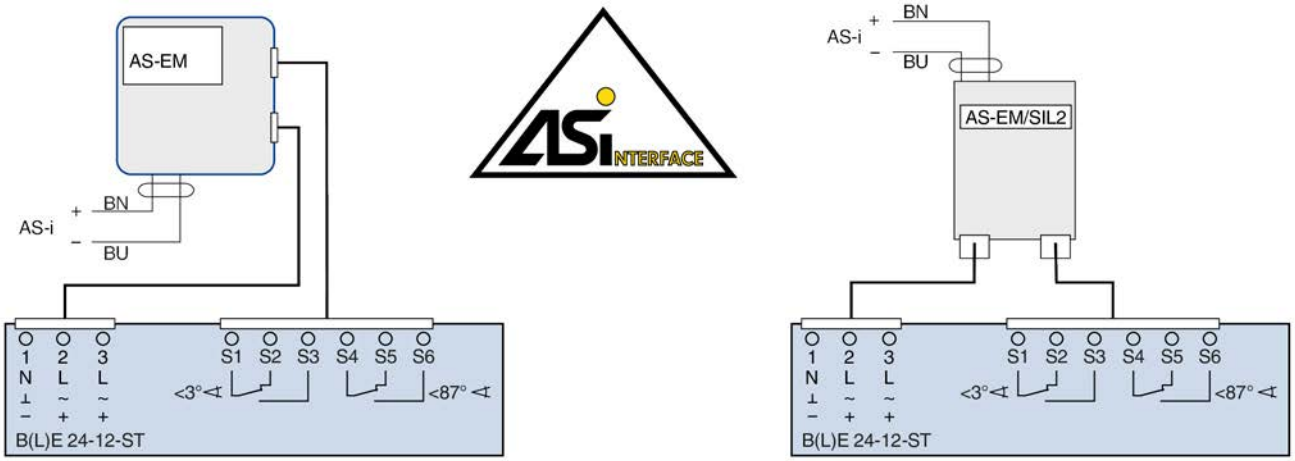

Fig. 24: Wiring example for attachments B24A and B24AS

BN Brown (+)
BU Blue (–)

The actuator and the AS-i control module are factory wired.

An AS-i bus (+/–) is used for both voltage supply and signals.

The connecting cables of the AS-EM/SIL module are fitted with wire end ferrules.

Technical data of the actuator, *7.3.2 'B230 ' on page 41* , *Chapter 7.3.1 'B24 ' on page 40* .

Technical data for the control module

Order code detail	B24A	B24AM	B24AS
Control module	**AS-EM/EK**	**AS-EM/M**	**AS-EM/SIL2**
Supply voltage	26.5 – 31.6 V DC		
Current consumption	450 mA	450 mA	< 400 mA from AS-i
Max. current load per output	400 mA	400 mA	340 mA
Max. current load per module	400 mA	400 mA	340 mA
Interfaces	4 inputs/3 outputs	4 inputs/3 outputs	2 outputs with transistor (typically 24 V DC from AS-i, voltage range 18 – 30 V)
Operating temperature	-5 to 75 °C	-5 to 75 °C	-20 to 70 °C
Storage temperature	-5 to 75 °C	-5 to 75 °C	-20 to 75 °C
Protection level, IEC protection class	IP 42	IP 42	IP 54
AS-i profile	S7.A.E	S7.A.E	S-7.B.E (Safety at Work) and S7.A.E (motor module)

7.4.2 B24BKNE

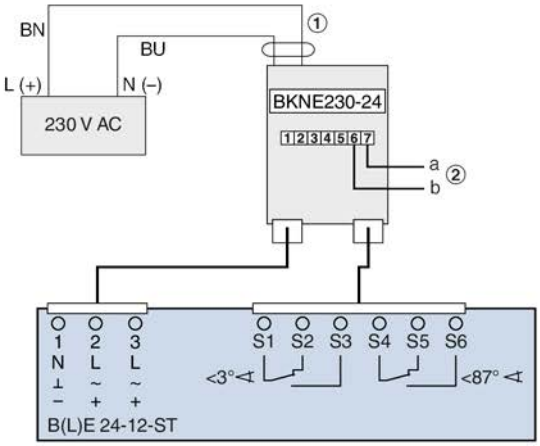

Fig. 25: Wiring example for attachment B24BKNE

BN	Brown L (+)	①	Supply voltage
BU	Blue N (–)	②	2-wire cable (signal)

The actuator and the control module are factory wired.

Connect the supply voltage to the connecting cable (approx. 1 m, with ferrules). 2-wire cable for signals (terminals 6 and 7).

Technical data of the actuator, *7.3.2 'B230 ' on page 41* , *Chapter 7.3.1 'B24 ' on page 40* .

Technical data for the control module

Order code detail	**B24BKNE**
Control module	**BKNE230-24**
Nominal voltage	AC 230 V 50/60 Hz
Functional range	AC 198...264 V
Rating	19 VA (including actuator)
Power consumption	10 W (including actuator)
Mains cable	Cable, 1 m (free of halogens, without plug)
2-wire cable	Screw terminals for wires, 2 x 1.5 mm²
Recommended cable	JE-H (St) Bd FE180/E30-E90
IEC protection class	II (protective insulation)
Ambient temperature (normal operation)	–30...+50 °C
Storage temperature	–40...+80 °C

7.4.3 SLC technology - B24C

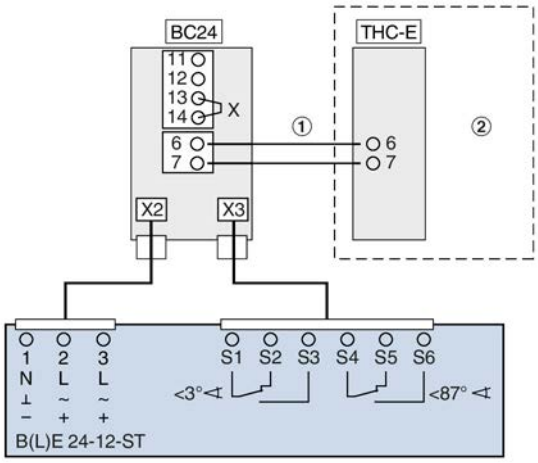

Fig. 26: B24C module

1 2-wire cable for supply voltage and signal
2 (THC-E, by others)
X2 Socket for an actuator
X3 Sockets for limit switches
6 / 7 2-wire cable to THC-E control module for signals and supply voltage, 2 x 1.5 mm², 150 m max., interchangeable cores
11 Not to be used
12 GND
13 24…27 V DC (30 mA max.)
14 IN

Terminals 12, 13 and 14 – duct smoke detector:

- If you want to connect a duct smoke detector, remove wire link X between terminals 13 and 14.
- You may use terminals 13 and 14 to connect a duct smoke detector or any other volt-free control contact, e.g. a fire alarm system. When the contact opens, the damper blades move to the defined safe position. For this case the terminals 13 and 14 of several BC24 modules can be switched in parallel.

The actuator and the control module are factory wired.

Technical data of the actuator, *7.3.2 'B230' on page 41*, *Chapter 7.3.1 'B24' on page 40*.

Connection data

Order code detail	B24C
Control module	**BC24-G2**
Supply voltage	Provided by the SLC control module
Power consumption	1 W
Contact load, terminals 13/14	30 mA max.
IEC protection class	III (protective extra-low voltage)

SLC wiring examples (THC-E)

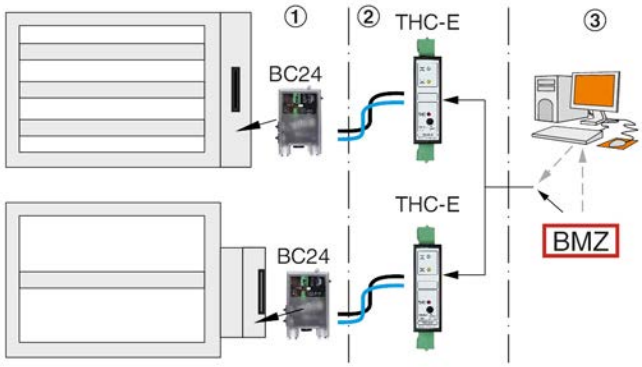

Fig. 27: Control signal from the central BMS

1 EK-JZ with integral control module B24C
2 THC-E (switch cabinet)
3 Fire alarm system and central BMS (if any)

Advantages

- Control of one damper or many dampers simultaneously (in parallel)

Disadvantages

- Wiring is comparatively time consuming

SLC wiring examples (SLC24-8E)

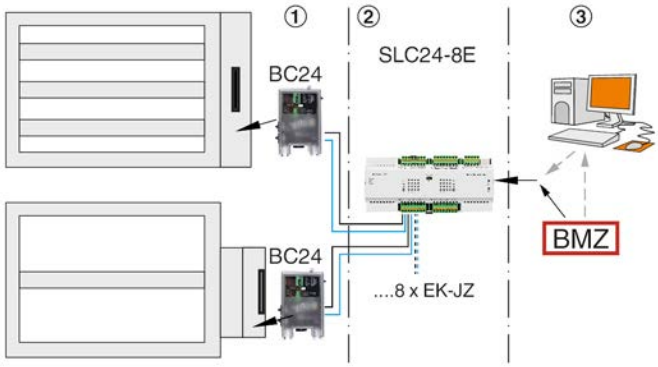

Fig. 28: Control signal from the central BMS

1 EK-JZ with integral control module B24C
2 SLC24-8E (switch cabinet)
3 Fire alarm system and central BMS (if any)

Advantages

- Quick and easy wiring

Disadvantages:

- Only parallel control of several dampers

7.4.4 B24D and B230D

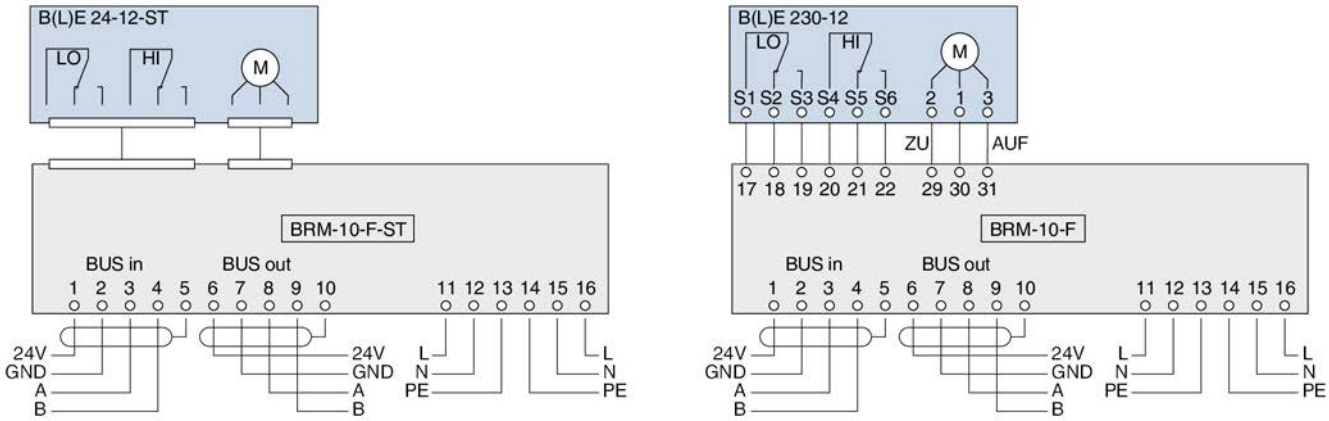

Fig. 29: Wiring example for attachments B24D and B230D

Check whether the damper blades move correctly from OPEN to CLOSED during commissioning.

The mode switch allows you to choose one of the following operating modes:

- Automatic (damper is controlled via the bus; status LEDs are not active)
- Maintenance (damper is controlled via the bus; status LEDs are not active)
- NC contact, manual (bus commands are overridden)
- NO contact, manual (bus commands are overridden)

The actuator and the control module are factory wired.

Technical data for the actuator, *7.3.2 'B230' on page 41*, *Chapter 7.3.1 'B24' on page 40*.

Technical data

Order code detail		**B24D**	**B230D**
Control module		**BRM-10-F-ST**	**BRM-10-F**
Electrical data	Supply voltage	18 – 32 V DC (typically 24 V)	
	Current consumption	5 mA (typically), 26 mA max. (for 100 ms when relays close)	
	Protection level	IP 20 (EN 60529)	
	IEC protection class	II	
Construction	Digital inputs	2 for feedback from limit switches (volt-free)	
	Digital outputs	1 for signalling to the fire damper	
Outputs	Actuator	24 V DC	24 / 230 V AC
	Permanent current, max.	AC 5 A	DC 5 A
	Switch-on current, max. (< 15 ms)	AC 8 A	DC 8 A
	Switch rating	1250 VA / 150 W	
Terminals for damper input	Max. cross-sectional area of conductors	Solid core: 0.08 – 2.5 mm² Multi-strand (without ferrule): 0.08 – 2.5 mm² Multi-strand (insulated ferrule): 0.25 – 1.5 mm² Multi-strand (non-insulated ferrule): 0.25 – 2.5 mm²	
	Max. current, terminals	10A	
	Pre fuse	MCB, 10 A, characteristic B	

Order code detail		B24D	B230D
Control module		**BRM-10-F-ST**	**BRM-10-F**
Terminals for bus, feed-back, damper output	Cross-sectional areas of conductors	Solid core: 0.2 – 1.5 mm² Multi-strand (without ferrule): 0.2 – 1.5 mm² Multi-strand (insulated ferrule): 0.25 – 0.75 mm² Multi-strand (non-insulated ferrule): 0.25 – 1.5 mm²	
Ambient conditions	Ambient temperature	0 to 45 °C	
	Ambient humidity	0 – 90%	

8 Commissioning/functional test

8.1 Commissioning

Before commissioning, each smoke control damper must be inspected to determine and assess its actual condition, *'Inspection, maintenance and repair measures' on page 51* .

The movement of the damper blades may over time lead to grooves in the side seals (where the blades meet the casing); this does not impair the function of the damper. The damper blades seals adapt themselves to the seal and can compensate for the smallest deviations.

Important: Install the smoke control damper without torsion (horizontal/vertical).

8.2 Functional test

General

Smoke control dampers must be checked regularly. A functional test involves closing the smoke control damper and opening it again. This is typically done with an input signal from the central fire alarm system.

9 Maintenance

General safety notes

DANGER!

Danger of electric shock! Do not touch any live components! Electrical equipment carries a dangerous electrical voltage.

- Only skilled qualified electricians are allowed to work on the electrical system.
- Switch off the power supply before working on any electrical equipment.

CAUTION!

Danger due to inadvertently actuating the smoke control damper. Inadvertent actuation of the damper blade or other parts can lead to injuries.

Make sure that the damper blade cannot be released inadvertently.

Regular care and maintenance ensure operational readiness, functional reliability, and long service life of the smoke control dampers.

The system owner is responsible for the maintenance of the smoke control damper. The system owner is responsible for creating a maintenance plan, for defining the maintenance goals, and for the functional reliability of the equipment.

Functional test

The functional reliability of the smoke control damper must be tested at least every six months; this has to be arranged by the system owner. If two consecutive tests, one 6 months after the other, are successful, the next test can be conducted one year later.

The functional test must be carried out in compliance with the basic maintenance principles of the following standards:

- EN 12101-8
- EN 13306
- EN 15423
- Depending on where dampers are installed, country-specific regulations may apply.

Maintenance

The smoke control damper and the actuator are maintenance-free with regard to wear but smoke control dampers must still be included in the regular cleaning of the smoke extract system.

Inspection

Smoke control dampers must be inspected before commissioning. After commissioning, the function has to be tested in regular intervals. Local requirements and building regulations must be complied with.

The inspection measures to be taken are listed in *'Inspection, maintenance and repair measures' on page 51*.

The test of each smoke control damper must be documented and evaluated. If the requirements are not fully met, suitable remedial action must be taken.

Repair

For safety reasons, repair work must only be carried out by expert qualified personnel or the manufacturer. Only original replacement parts are to be used. A functional test is required after any repair work *8 'Commissioning/functional test' on page 49*.

Any repair must be documented.

Cleaning

All surfaces of TROX components and systems, with the exception of electronic parts, may be wiped with a dry or damp cloth. All surfaces may also be cleaned with an industrial vacuum cleaner. To avoid any scratches, a soft brush should be used on the suction inlet. Use a soft brush to clean the seals. Do not use cleaning agents that contain chlorine. Equipment for removing stubborn contamination, e.g. scrubbing sponges or scouring cream, may damage the surfaces and must not be used.

Inspection, maintenance and repair measures

Interval	Maintenance work	Personnel
A	Accessibility of the smoke control damper ▪ Internal and external accessibility – Provide access	Specialist personnel
	Installation of the smoke control damper ▪ Installation according to the operating manual ↳ *5 'Installation' on page 16* – Install the smoke control damper correctly	Specialist personnel
	Connection of smoke extract ducts/cover grille/flexible connector ↳ *6 'Smoke extract duct and cover grille' on page 37* ▪ Connection according to this manual – Establish correct connection	Specialist personnel
	Supply voltage for the actuator ▪ Power supply according to the actuator rating plate – Provide correct voltage	Skilled qualified electrician
A / B	Check of the smoke control damper for damage ▪ Smoke control damper, damper blades and seal have to be intact – Repair or replace the smoke control damper	Specialist personnel
	Functional test of the smoke control damper ↳ *8.2 'Functional test' on page 49* ▪ Actuator function OK (damper blades close and open) – Determine and eliminate the cause of the fault – Replace actuator – Repair or replace the smoke control damper	Specialist personnel
C	Cleaning the smoke control damper ▪ No contamination in the interior or on the exterior of the smoke control damper – Remove contamination	Specialist personnel

Interval

A = Commissioning

B = Regularly

The functional reliability of smoke control dampers must be tested at least every six months. If two consecutive tests are successful, the next test can be conducted one year later.

C = As required, depending on the degree of contamination

Maintenance work

Item to be checked

- Required condition
  – Remedial action if necessary

10 Decommissioning, removal and disposal

Final decommissioning

- Switch off the ventilation system.
- Switch off the power supply.

Removal

DANGER!

Danger of electric shock! Do not touch any live components! Electrical equipment carries a dangerous electrical voltage.

– Only skilled qualified electricians are allowed to work on the electrical system.
– Switch off the power supply before working on any electrical equipment.

1. Disconnect the wiring.
2. Remove the smoke extract ducts.
3. Remove the smoke control damper.

Disposal

ENVIRONMENT!

Risk of harm to the environment due to incorrect disposal of goods and packaging!

Incorrect disposal can harm the environment.

Have electronic waste and electronic components disposed of by an approved specialist disposal company.

For disposal the smoke control damper must be completely disassembled.

11 Flange dimensional drawing

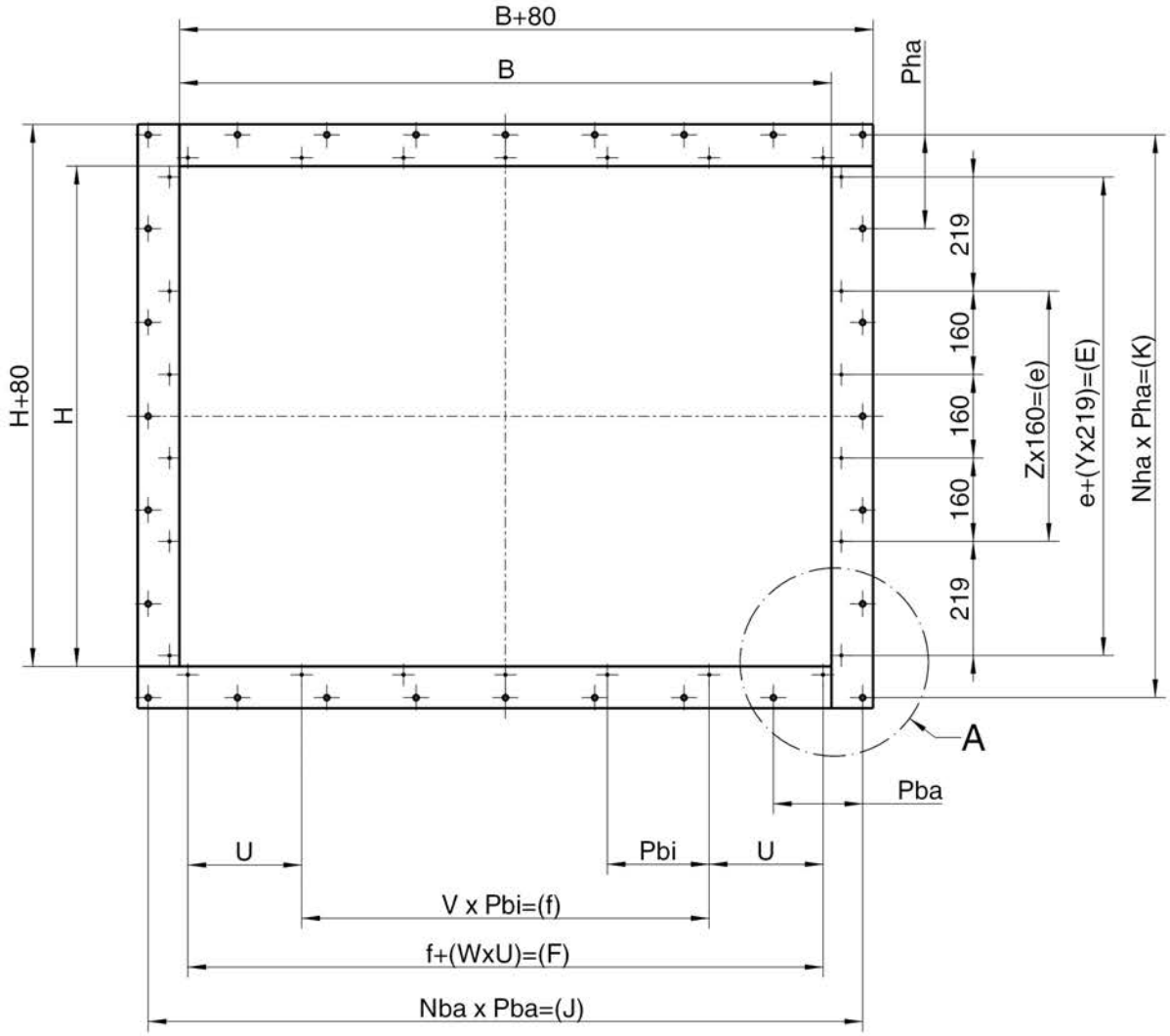

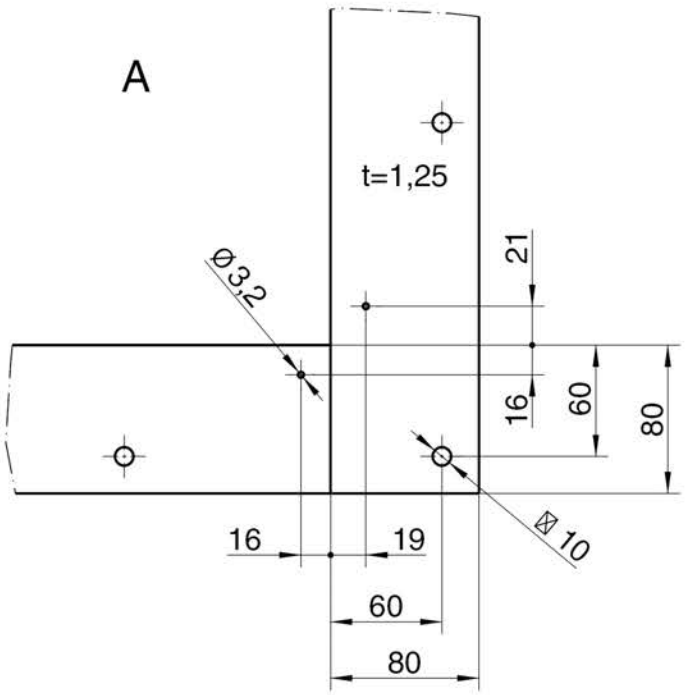

B	Nba	Nbi	V	W
100-179	2	0	0	0
180-277	3	1	0	1
278-477	4	2	0	2
478-677	5	3	1	2
678-877	6	4	2	2
878-1077	7	5	3	2
1078-1250	8	6	4	2

H	Nha	Z	Y	e	E
100-165	2	0	0	0	0
320	3	0	$\frac{278}{219}$	0	278*
480	3	0	2	0	438
640	4	1	2	160	598
800	5	2	2	320	758
960	6	3	2	480	918
1120	7	4	2	640	1078
1280	8	5	2	800	1238
1440	9	6	2	960	1398
1600	10	7	2	1120	1558
1760	11	8	2	1280	1718
1920	12	9	2	1440	1878
2080	13	10	2	1600	2038
2240	14	11	2	1760	2198
2400	15	12	2	1920	2358
2560	16	13	2	2080	2518

* For H-dimension 320, a Ø 3.2 hole is added in the middle of E-dimension (278).

Formulas

Pha = (H + 120) / Nha

Pba = B + 120) / Nba

Pbi = (B - 78) / Nbi

F = B - 32

f = F - U

U = (F - f) / 2

E = H - 42

e = E - (Y × 219)

Nomenclature

EK-JS

B - Widths nominal dimension

H - Heights nominal dimension

Flange, holes outside (wall mounting)

J - Sum of the distances of the outer holes on width side

Pba - Spacing of the outer holes on width side

Nba - Pitch of the outer holes on width side

K - Sum of the distances of the outer holes on height side

Pha - Spacing of the outer holes on height side

Nha - Pitch of the outer holes on height side

Flange, holes inside (flange - damper connection)

F - Sum of the distances of the outer holes on width side

Pbi - Spacing of the inner holes on width side

Nbi - Pitch of the inner holes on width side

f - Sum of the distances of the inner internal holes on width side

U - Spacing of the inner external holes on width side

V - Number of inner internal holes on width side

W - Number of the inner external holes on width side

E - Sum of the distances of the inner holes on height side

e - Sum of the distances of the inner internal holes on height side

Z - Number of inner internal holes on height side

Y - Number of the inner external holes on height side

P - Spacing

N - Pitch

b - Width side

h - Height side

a - outdoors

i - inside

12 Index

The art of handling air

TROX GmbH
Heinrich-Trox-Platz
47504 Neukirchen-Vluyn, Germany

Germany
Phone: +49 (0) 2845 2020
+49 (0) 2845 202-265
E-mail: trox@trox.de
http://www.troxtechnik.com

Valid from 01/2022